2020 - 2021

Faisceaux d'allumage | *Ignition wire set*

SASIC

TecDoc CERTIFIED DATA SUPPLIER · E.T.A.I INFOPRO DIGITAL AUTOMOTIVE · CICERONE · GOLDA

WE CREATE EXCELLENCE

Information produit
Product information

Type de connecteur
Connector type

DIN	M4	SAE

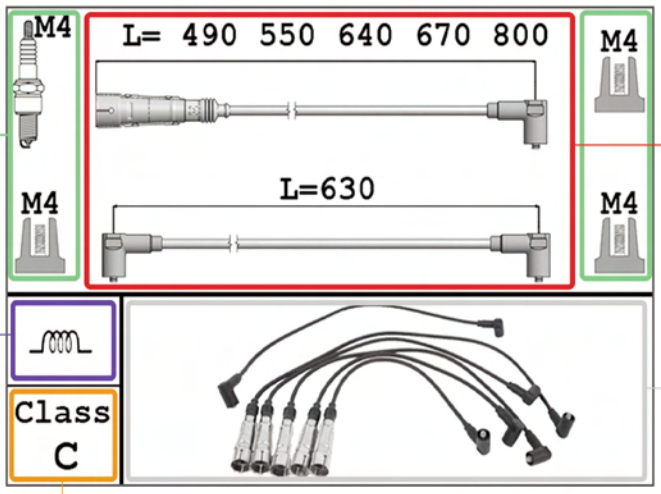

Plan des faisceaux
Ignition wire set plan

L= Longueur1 longueur2...
L= Length1 Length2...

Les longueurs sont en milimètres
The length are in milimeters

Technologie utilisée
Technology used

CU Câble en cuivre
Coper core

R Câble à résistance active
Active resistance ignition lead

Câble à réactance
Reactance or reactive ignition lead

Photo du kit faisceaux

Ignition wire set picture

Classe de câble *Cable class*	A	B	C	D	E	F
Température de surcharge thermique °C *Thermal overload temperature °C*	105	120	155	180	220	250

Préconisation de montage et démontage
Fitting instructions

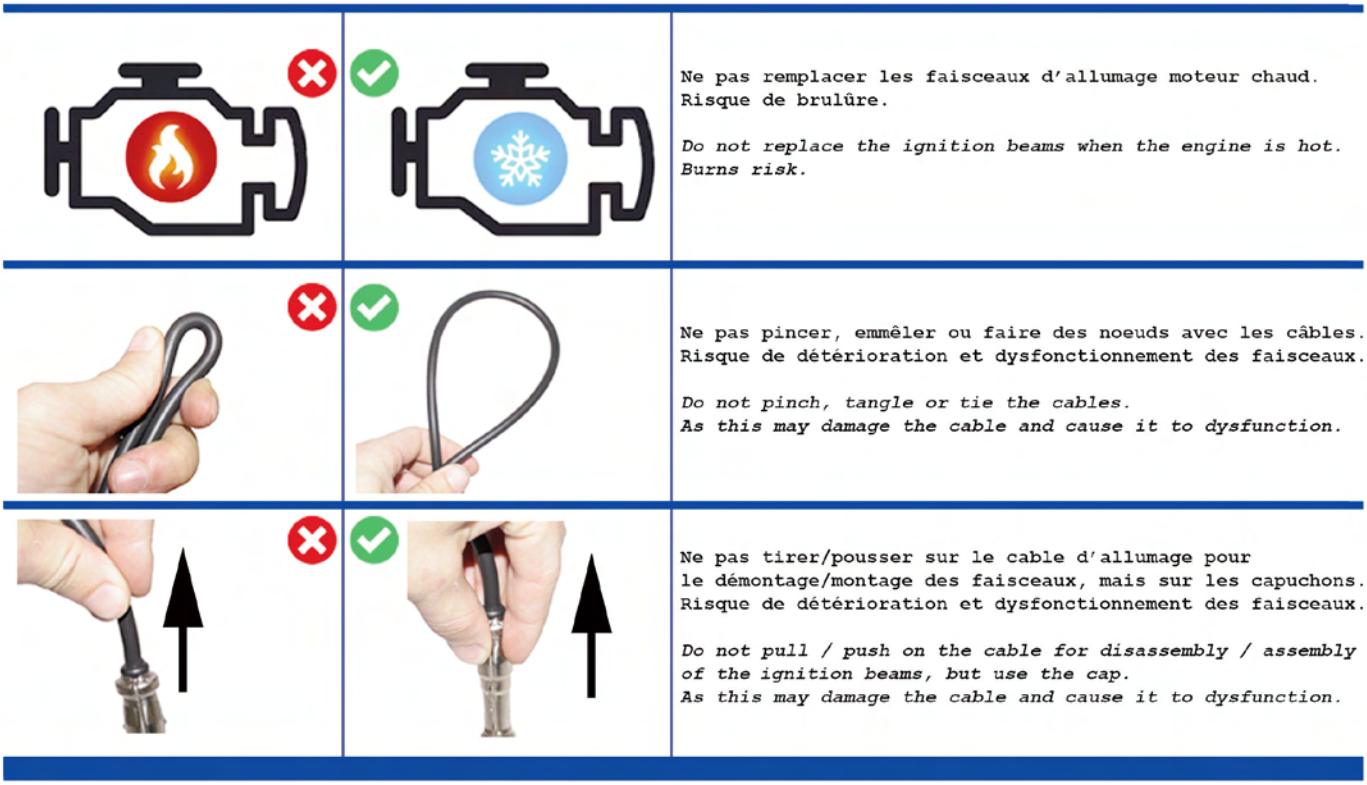

Ne pas remplacer les faisceaux d'allumage moteur chaud.
Risque de brulûre.

Do not replace the ignition beams when the engine is hot.
Burns risk.

Ne pas pincer, emmêler ou faire des noeuds avec les câbles.
Risque de détérioration et dysfonctionnement des faisceaux.

Do not pinch, tangle or tie the cables.
As this may damage the cable and cause it to dysfunction.

Ne pas tirer/pousser sur le cable d'allumage pour le démontage/montage des faisceaux, mais sur les capuchons.
Risque de détérioration et dysfonctionnement des faisceaux.

Do not pull / push on the cable for disassembly / assembly of the ignition beams, but use the cap.
As this may damage the cable and cause it to dysfunction.

☆ Disponibilité immédiate - *Immediate availability*

SASIC	MARQUE Make	
☆ 9280001	CITROEN	Berlingo I II III VL VU BX Evasion Jumper Xantia Xsara ZX
	FIAT	Ducato 94-01
	PEUGEOT	205 306 309 405 406 806 Boxer I II Expert I II III VL VU Partner I II III VL/VU
☆ 9280002	CITROEN PEUGEOT	BX Evasion Xantia XM 306 405 406 605 806
9280003	CITROEN	AX Berlingo I II III VLVU Saxo Xsara ZX
	PEUGEOT	106 205 306 405 Partner I II III VL/VU
9280004	PEUGEOT	106 205 306 309 405 Partner I II III VL/VU
☆ 9280005	CITROEN PEUGEOT	BX 205 309 405
9284001	RENAULT	Espace JE Laguna I/Nevada Megane I/ Cab. / Classic/ Coupé Scenic I -04/03
9284002	RENAULT	Megane I/ Cab./ Classic/ Coupé Scenic I
☆ 9284003	RENAULT	Espace JE Laguna I/ Nevada Megane I/ Classic/ Coupé
9284004	RENAULT	Clio I / II Kangoo I VL VU Twingo I
☆ 9284005	DACIA	Dokker Lodgy Logan I II Sandero I II Clio II
	RENAULT	Kangoo I VL VU Kangoo II VL VU Megane I/ Break/ Cab./ Classic Megane I Coupé Scenic I -04/03
9284006	RENAULT	Clio II 03/98- Kangoo I -02/03 VL VU
9284007	RENAULT	Clio I -02/98 Express Megane I/ Break/ Classic
☆ 9284009	RENAULT	Clio I -02/98 Express Super 5Twingo I
9284010	RENAULT	Clio I Laguna I R19/ Cab. R19 Chamade
☆ 9284011	RENAULT	Clio II Kangoo I VL VU Twingo I II
☆ 9284012	DACIA RENAULT	Logan I II Sandero I II Clio II III IV Kangoo I VL VU Modus Thalia Symbol II Twingo I II
☆ 9284013	RENAULT	Clio II 03/98-
☆ 9284015	RENAULT VOLVO	Laguna I/ Nevada Safrane S40 V40
☆ 9284016	RENAULT	R4 R6 R8 R12 R15 R16
☆ 9284017	LANCIA RENAULT VOLVO	Y10 Estafette R9 R11 R18 Super 5 66
☆ 9286002	OPEL	Astra F /G Combo Corsa B Vectra A / B
9286003	DAEWOO	Kalos Lacetti Lanos Nubira

SASIC	MARQUE Make	
9286004	OPEL	Corsa B
☆ 9286005	KIA	Rio
☆ 9286007	HYUNDAI	Accent Getz
☆ 9286009	FIAT	Brava Bravo Marea Multipla Palio
	LANCIA	Delta Lybra
☆ 9286014	FIAT	Doblo Palio Panda Punto Seicento Siena Strada
	LANCIA	Ypsilon
☆ 9286015	NISSAN	100 NX Almera Primera
☆ 9286017	FIAT	Cinquecento Panda Punto Seicento Strada
	LANCIA	Y (Epsilon)
☆ 9286018	HYUNDAI	Coupé Elantra Lantra Trajet Tucson
	KIA	Carens Ceed Cerato Sportage
9286020	AUDI SEAT	80 Coupé Cordoba Ibiza II III IV Inca Toledo
	VOLKSWAGEN	Caddy Corrado Golf I Cab. Golf II / III / III Cab./ IV Jetta Passat I II Polo - Santana Scirocco Vento
9286021	AUDI SEAT	A3 Cordoba Ibiza II III IV Leon Toledo
	SKODA VOLKSWAGEN	Octavia Bora Golf III / III Cab. / IV Golf IV / IV Cab. Polo
9286022	DAEWOO OPEL	Lacetti Astra F Calibra Omega B Sintra Vectra A/B
9286025	AUDI SKODA VOLKSWAGEN	A4 I II A6 II A8 Superb Passat V 96-05
9286028	SEAT VOLKSWAGEN	Alhambra Sharan
9286029	MINI	Mini Cab. R52 Mini R50 R53
9286031	FORD	C-Max Fiesta 95-10/08 Focus Fusion
	MAZDA VOLVO	2 C30 S40 V40 V50
☆ 9286033	MERCEDES	Classe A (169) Classe B (245)
☆ 9286035	RENAULT VOLVO	Safrane 850 C70 S70 V70
9286037	MERCEDES	Classe G Série 123 124 Série 190 (201)
9286040	SKODA VOLKSWAGEN	Octavia Bora Caddy Golf IV New BeetleTouran

☆ Disponibilité immédiate - *Immediate availability*

	MARQUE Make	
9286043	FORD	C-Max Fiesta 02-10/08 Focus Mondeo
9286044	FORD	Fiesta 02-10/08 Ka
☆ 9286045	ALFA ROMEO FIAT LANCIA	Mito 500 (3 Portes) Doblo Grande Punto Idea Linea Panda Punto Punto Evo Musa Ypsilon
9286047	FIAT LANCIA	Albea Brava Bravo Marea Palio Punto Y (Epsilon)
9286048	SEAT SKODA VOLKSWAGEN	Arosa Cordoba Ibiza II III IV Inca Felicia Caddy Golf III Polo Vento
9286049	FORD	Fiesta 02-10/08 Mondeo
9286050	SEAT VOLKSWAGEN	Arosa Cordoba Ibiza II III IV Lupo Polo -05/09
☆ 9286051	HYUNDAI KIA	Accent Coupé Elantra Getz Matrix Cerato
9286053	AUDI VOLKSWAGEN	A4 I 94-2000 Passat V 96-05
9286054	FORD	Escort Fiesta 89-02 Mondeo Orion
9286055	CHEVROLET DAEWOO	Aveo Kalos Matiz Kalos Matiz
9286057	VOLKSWAGEN	Transporter TYP3
9286058	DAEWOO	Kalos Lanos Rezzo
☆ 9286059	HYUNDAI	Atos Getz
9286060	AUDI VOLKSWAGEN	A4 I A6 I/ II / Cab. Passat V
9286061	FORD	Galaxy
☆ 9286062	SUBARU SUZUKI	Justy Baleno Carry Grand Vitara Ignis Jimny Liana Swift Wagon R
9286063	DAEWOO	Matiz
9286064	FIAT LANCIA	Punto Y (Epsilon)
9286065	AUDI VOLKSWAGEN	80 90 100 200 Cab. Coupé GT Quattro Passat I II Santana
9286077	HYUNDAI	Accent Atos Getz
9286079	FORD	Cougar Focus Maverick Mondeo
9286080	OPEL	Astra F

	MARQUE Make	
9286081	MERCEDES	Classe C (202) CLK Coupé Classe E (210) Classe SLK Classe V (638) Série 124 Sprinter Vito
9286082	SEAT SKODA VOLKSWAGEN	Arosa Cordoba Ibiza II III IV Inca Felicia Octavia Golf II III Polo -05/09 SantanaTransporter TYP4
9286084	AUDI SEAT SKODA VOLKSWAGEN	A1 A3 Altea Ibiza V Leon Toledo Fabia Octavia Rapid Roomster Yeti Caddy Golf VI / Cab. Jetta New Beetle Polo (6C 6R) Touran
9286085	FORD	Fiesta 02-10/08 Ka
9286087	MERCEDES	Classe E (210) Classe M Classe SLK (170) Sprinter
9286088	BMW	Série 3 E30 Série 5 E28

Mito

9286045

OE 55195775+55195776

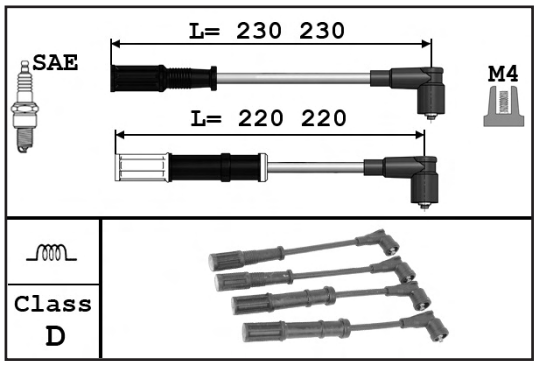

1.4i 8v.	06/11-	350A1000 955A9000

80

9286020

OE 803998031

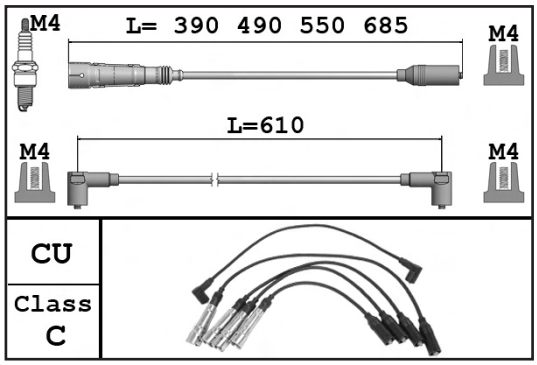

1.3	07/84-	EP
1.6i		ABM RN SA
1.6i	07/84-	DT
1.8	07/84-	DS
1.8i /E /GTE /4WD		DZ
1.8i /4WD		JN SF
1.8 /4WD	10/86-	NE
1.8 S	07/84-	RU
1.9i /4WD		SD
2.0i E /4WD		3A AAD
2.0i Avant		ABT

9286065

OE 437998031B

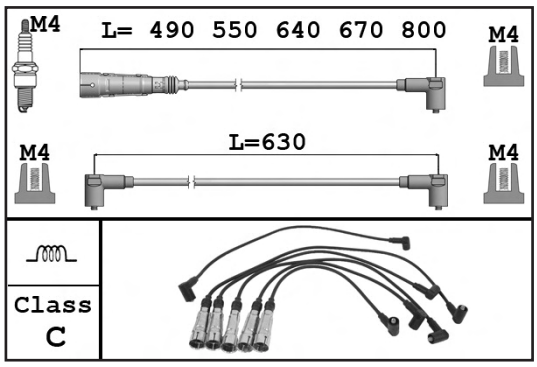

2.3i/E /4WD /Avant	NG

AUDI

90

9286065 — **OE** 437998031B

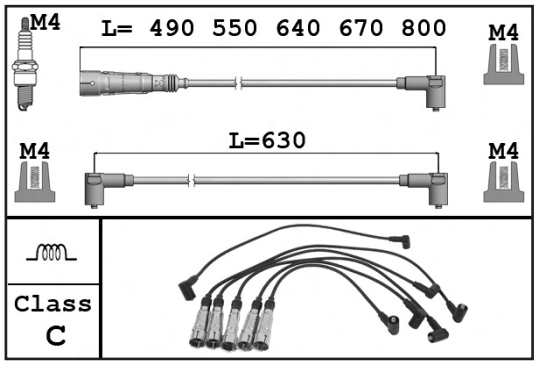

2.0i /4WD	HP JS PS
2.2i /4WD	HY JT KV KX
2.3i /4WD	NG

100

9286065 — **OE** 437998031B

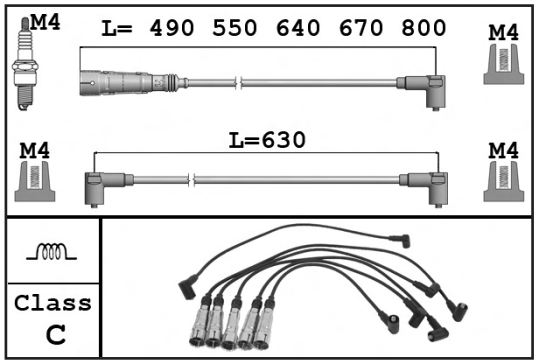

2.0i -02/88	KP
2.0i /Avant	RT
2.2i /4WD	KU
2.2i	KZ
2.2i Turbo /4WD	MC
2.2i 4WD	PX
2.3i /4WD	AAR NF

200

9286065 — **OE** 437998031B

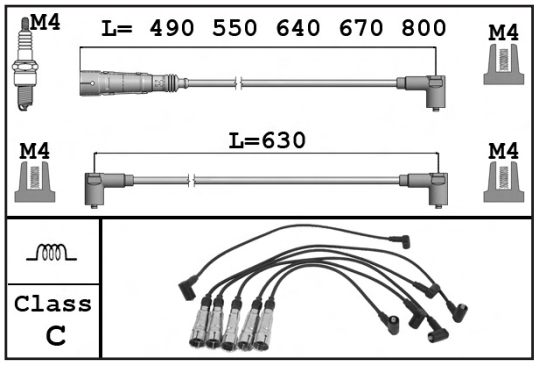

2.1i Turbo /4WD	KG
2.2i	KU
2.2i Turbo /4WD	MC
2.3	NF

A1 I -10/2018

9286084 — **OE** 03F905409C

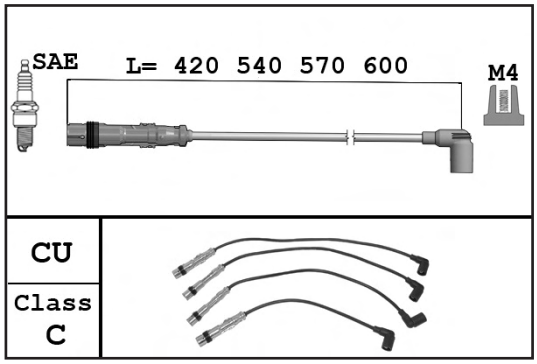

1.2 TFSi TSi	CBZA

A3

9286084

OE 03F905409C

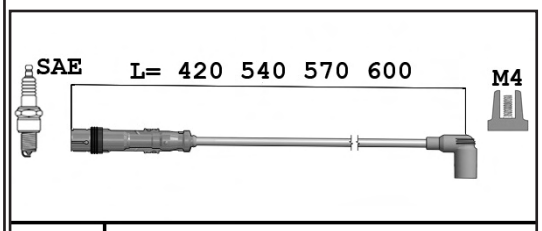

CU

Class C

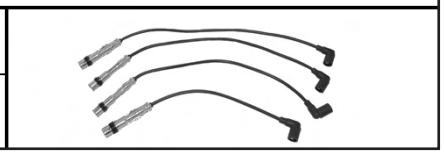

1.2 TSi	CBZB

9286021

OE 06A905409A

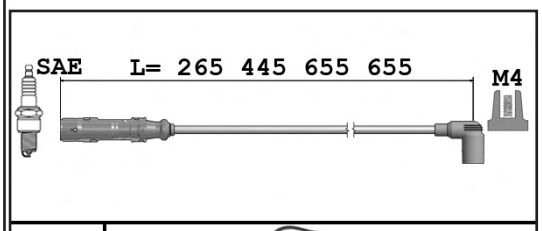

CU

Class C

1.6i	-10/00	AEH AKL APF

A4 I 94-2000 ...

9286053

OE N10243611+N10204402

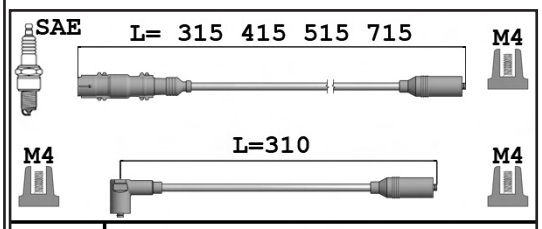

CU

Class C

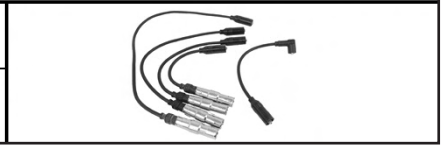

1.6i	02/95- -ch 8DZW007799	ADP

9286060

OE 058905409A

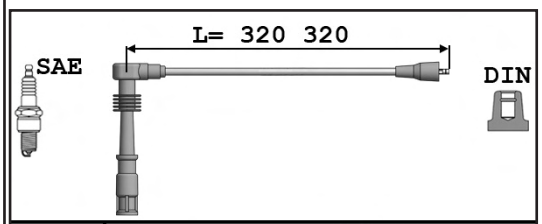

CU

Class C

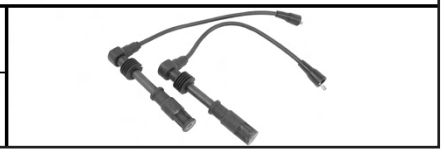

1.8i 20v. /4WD	-ch 8DZ1200000	ADR AFY APT ARG AVV

AUDI

... A4 I 94-2000

9286025 — **OE** 078905113

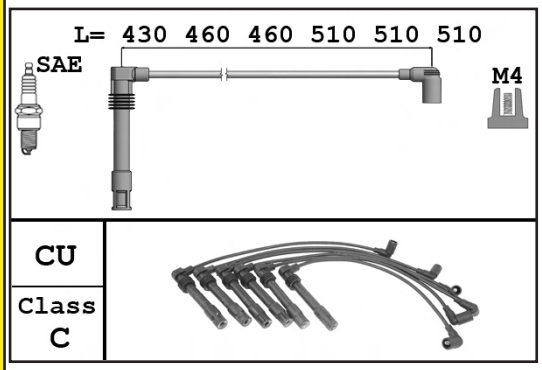

2.4i V6 30v. /4WD
2.8i V6 30v. /4WD

AGA ALF ARJ
ACK ALG

A4 II 2000-2008

9286025 — **OE** 078905113

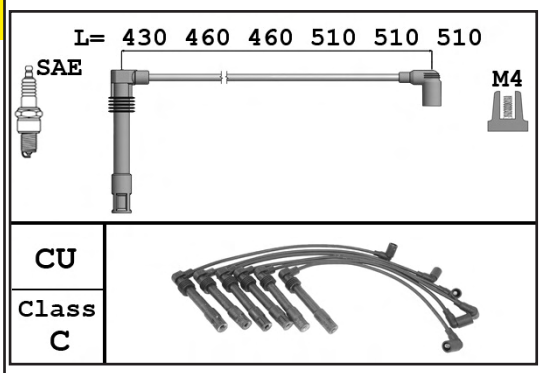

2.4i V6 30v.

BDV

A6 I 94-97

9286060 — **OE** 058905409A

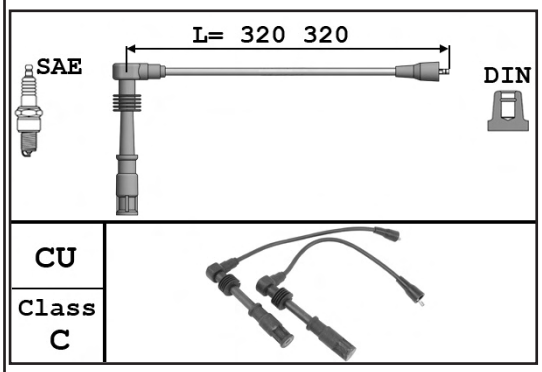

1.8i 20v. /4WD

ADR

A6 II 97-04/2004 ...

9286060 — **OE** 058905409A

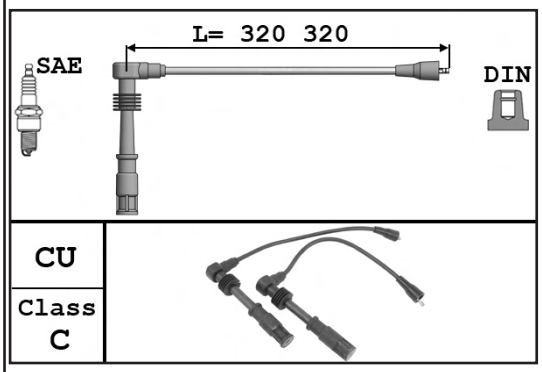

1.8i 20v. Turbo /4WD

AFY

... A6 II 97-04/2004

9286025 — OE 078905113

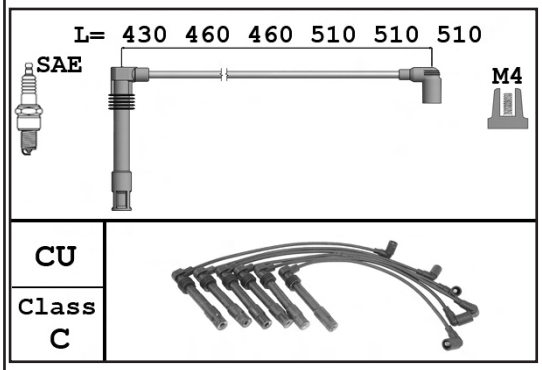

2.4i V6 30v. /4WD	AGA ALF ARJ
2.4i V6	ALW
2.4i V6 30v. /4WD	BDV
2.8i V6 30v. /4WD	ACK ALG
2.8i V6 /4WD	AGE

A8

9286025 — OE 078905113

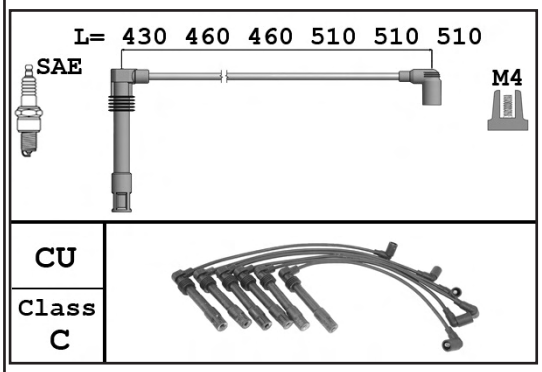

2.8i V6 30v. /4WD	ACK ALG

Cabriolet

9286060 — OE 058905409A

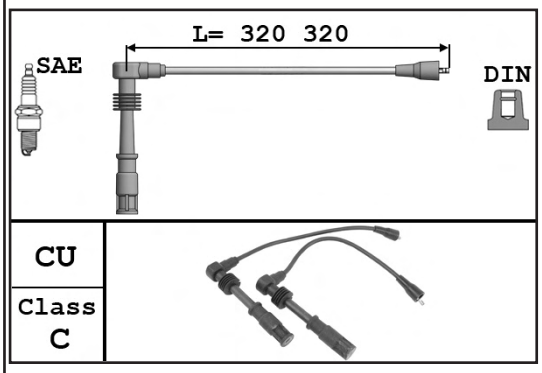

1.8i 20v.	ADR

9286065 — OE 437998031B

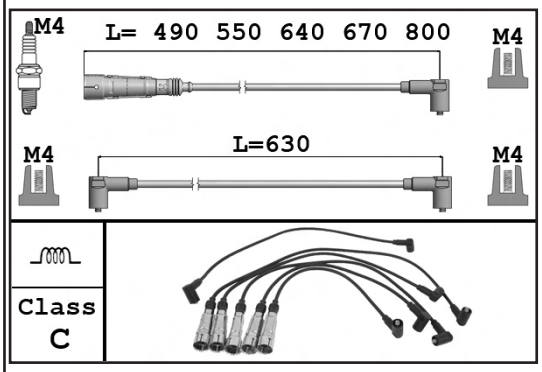

2.3i	NG

AUDI

Coupé

9286020

OE 803998031

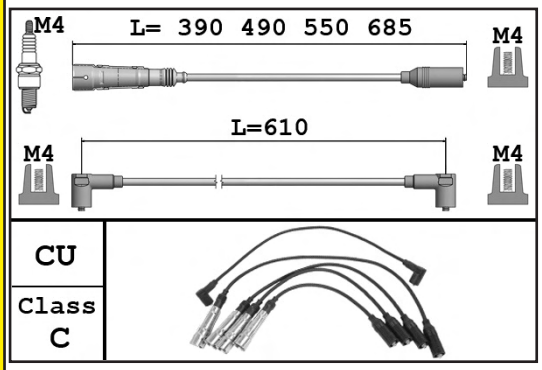

1.8i
2.0i E

DZ
AAD ABK

9286065

OE 437998031B

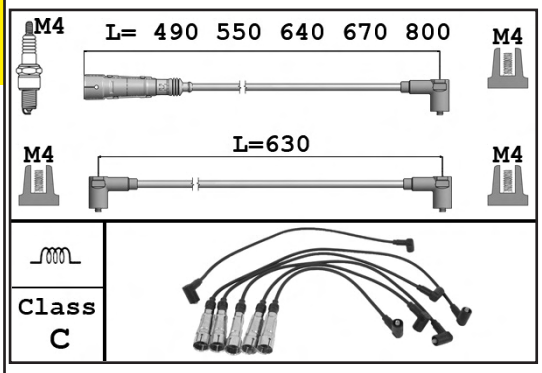

2.2i /4WD
2.3i /4WD

KV
NG

GT

9286065

OE 437998031B

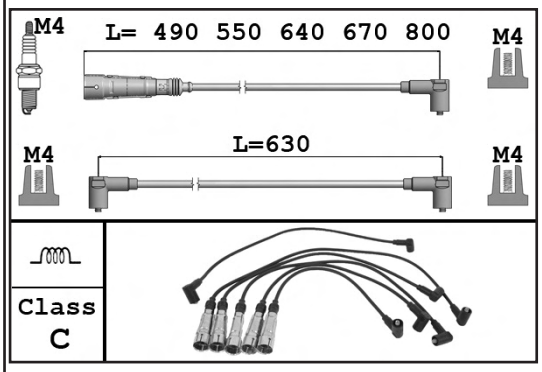

2.0i
2.2i /4WD
2.3i /4WD

HP JS
JT KV KX
NG

Quattro

9286065

OE 437998031B

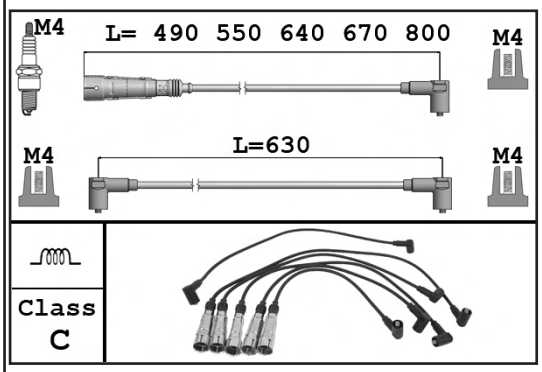

2.1i Turbo 4WD

KW

BMW

Série 3 E30

9286088 — **OE** 12121720529

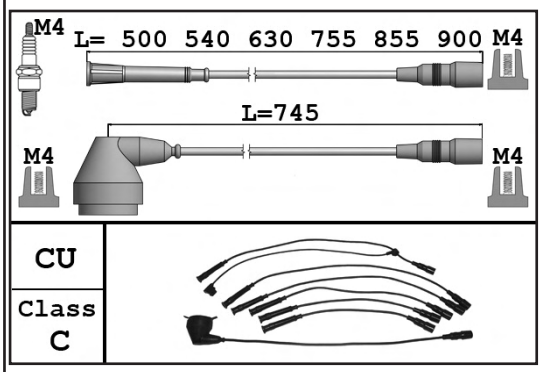

2.0i 320 2.5i 325 2.7i 325	09/88-	M20B20 M20B25 M20B27

Série 5 E28

9286088 — **OE** 12121720529

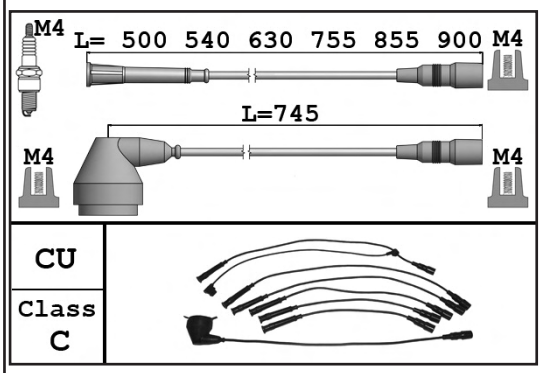

2.7i 325	01/87-	M20B27

CHEVROLET

Aveo

9286055 — **OE** 96288956

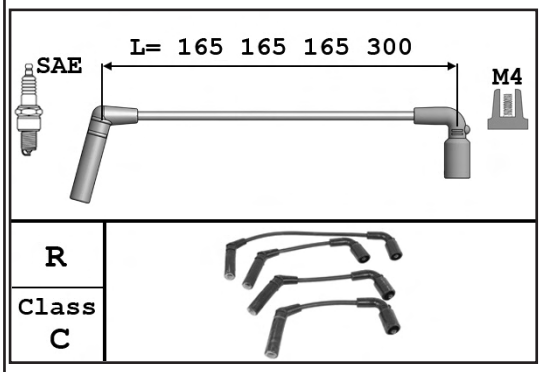

1.2i 8v.		F12S3

Kalos

9286055 — **OE** 96288956

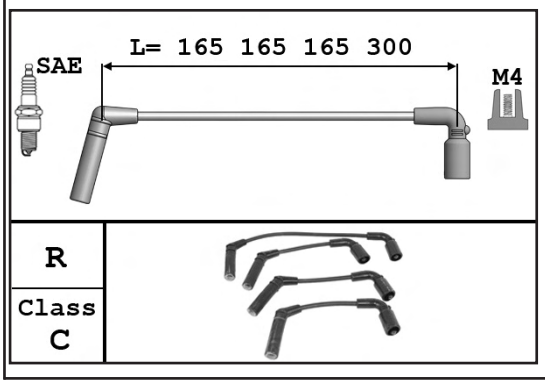

1.2i 8v. /GPL		B12S1

CHEVROLET

Matiz

9286055 — **OE** 96288956

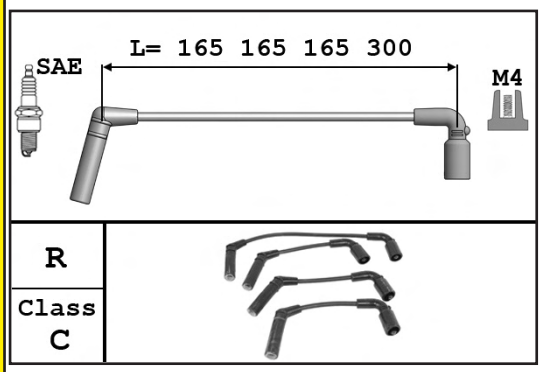

1.0i 8v. /GPL

B10S/S1

CITROEN

AX

9280003 — **OE** 5967P1

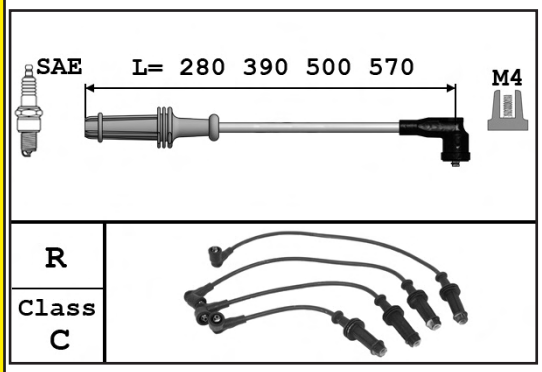

1.0i 8v.
1.1i 8v.
1.4i 8v.

Berlingo I II III VL -05/18 ...

9280003 — **OE** 5967P1

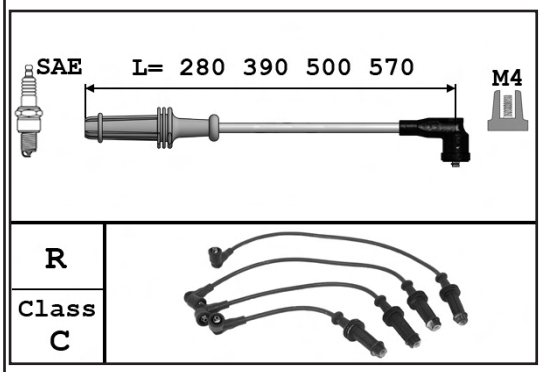

1.1i
1.4i

TU1M+
TU3JP

... Berlingo I II III VL -05/18

9280001 — OE 5967N7

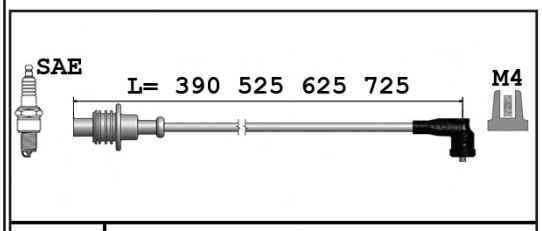

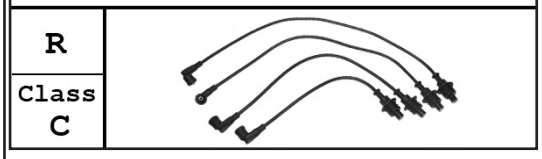

1.8i	XU7JB

BX

9280005 — OE 5967K4

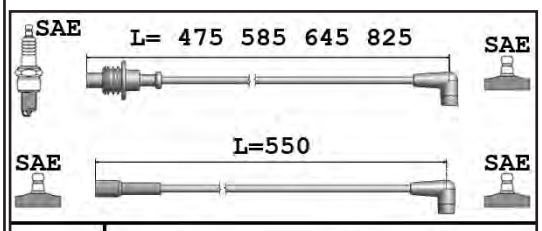

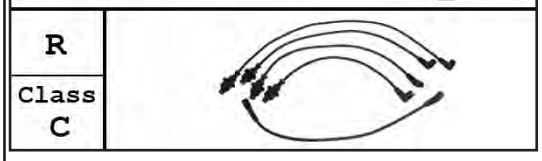

1.6/i 1.9	-28/04/91

9280001 — OE 5967N7

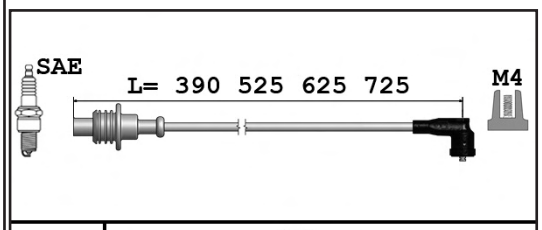

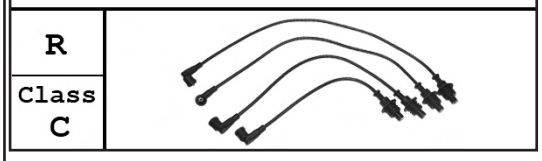

1.6i	29/04/91-

9280002 — OE 5967N1

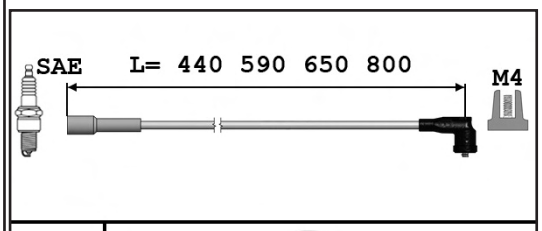

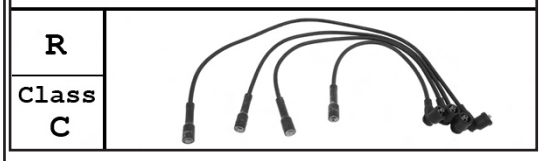

1.9i	03/05/90-

CITROEN

Evasion

9280001 — OE 5967N7

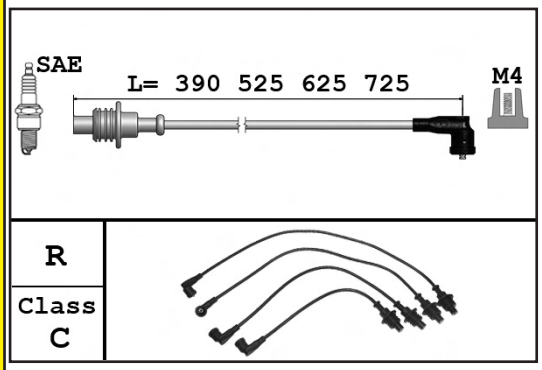

1.8i	XU7JP

9280002 — OE 5967N1

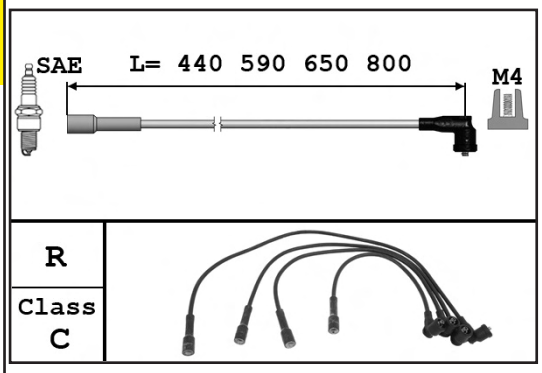

2.0i /Turbo	XU10J2/TE

Saxo

9280003 — OE 5967P1

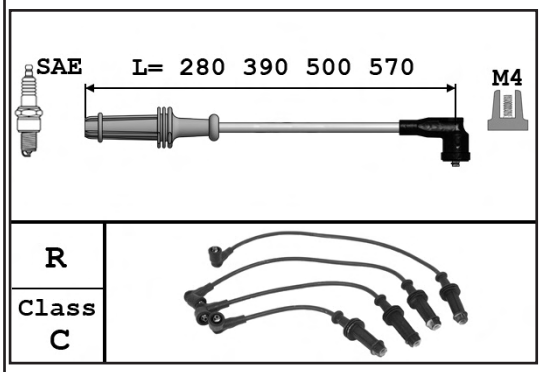

1.0i 8v.		TU9M
1.1i 8v.		TU1M+
1.4i 8v.	-04/01/98 BVM	TU3JP
1.4i 8v.	BVA	TU3JP
1.6i		TU5JP

Xantia ...

9280001 — OE 5967N7

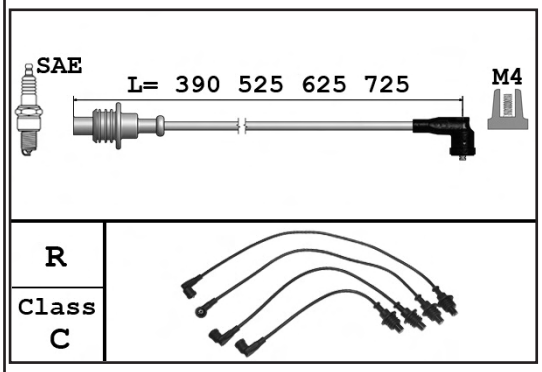

1.6i	XU5JP
1.8i	XU7JB/JP

... Xantia

9280002 — **OE** 5967N1

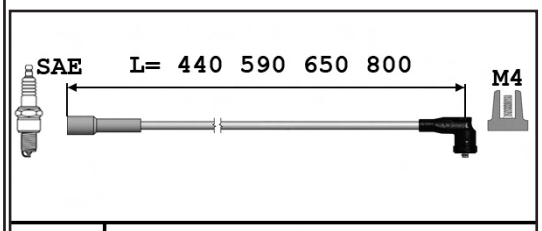

R
Class C

2.0i /Turbo	XU10J2/TE

XM

9280002 — **OE** 5967N1

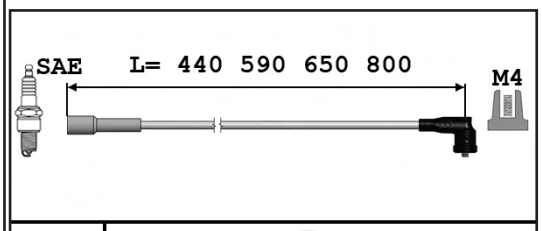

R
Class C

2.0i Turbo	XU10J2TE

Xsara

9280003 — **OE** 5967P1

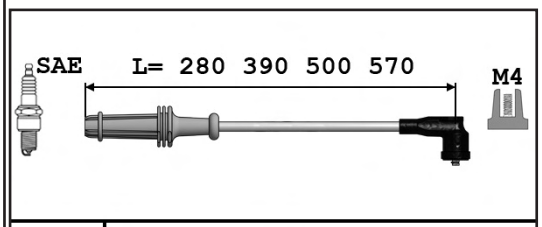

R
Class C

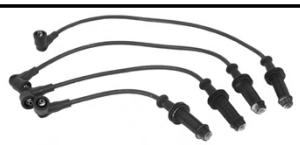

1.4i	-31/05/98	TU3JP
1.6i	-31/05/98	TU5JP

9280001 — **OE** 5967N7

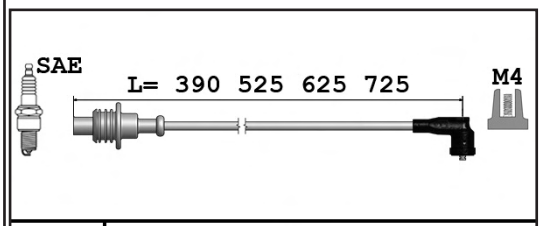

R
Class C

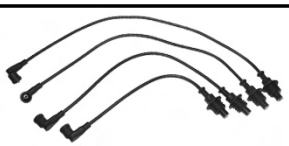

1.8i	XU7JB/JP

CITROEN

ZX

9280003

OE 5967P1

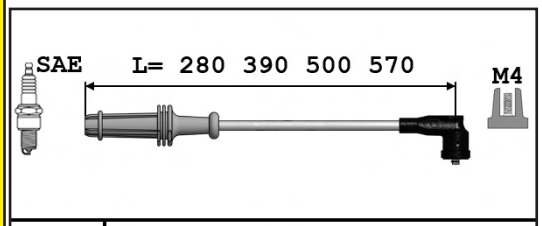

1.1i 8v.	15/04/94-02/09/96	TU1M
1.1i 8v.	03/09/96-	TU1M+
1.4i	08/09/92-	TU3JP TU3MC
1.6i		TU5JP

9280001

OE 5967N7

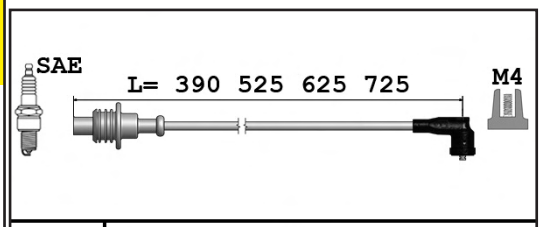

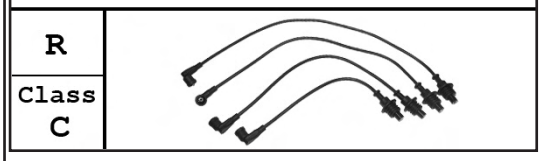

1.6i	XU5JP XU5M
1.8i	XU7JP
1.9i	
2.0i 8v.	XU10J2

Berlingo I II III VU -05/18

9280003

OE 5967P1

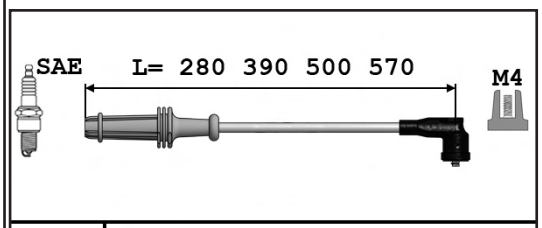

1.1i 8v.	TU1M+
1.4i	TU3JP

9280001

OE 5967N7

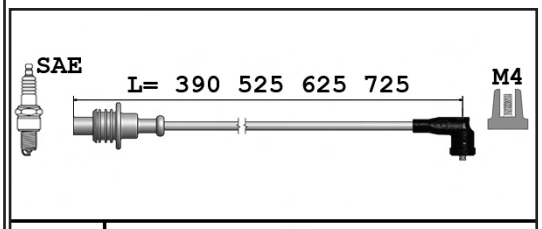

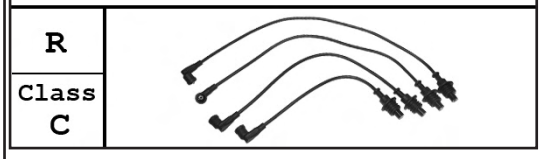

1.8i	XU7JB

CITROEN

Jumper

9280001	OE 5967N7	
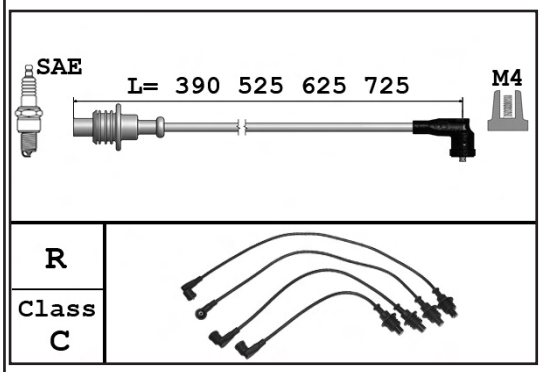	2.0i	XU10J2

DACIA

Dokker

9284005	OE 224404252R	
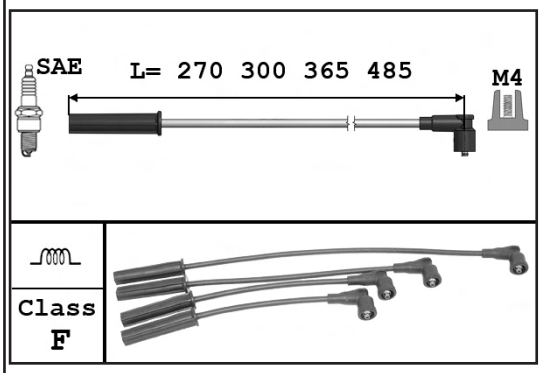	1.6i 8v.	K7M812/28

Logan I ...

9284012	OE 224404659R	
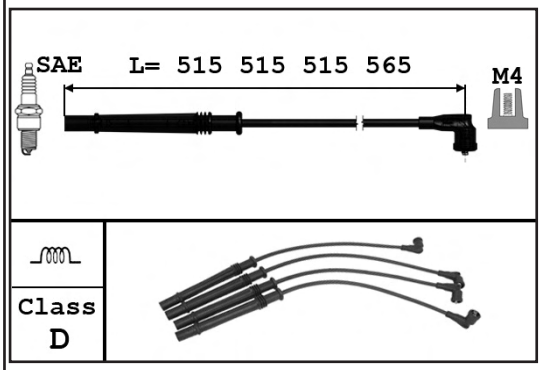	1.0i 16v. 1.2i 16v.	D4D760 D4F732/34

DACIA

... Logan I

9284005 — **OE** 224404252R

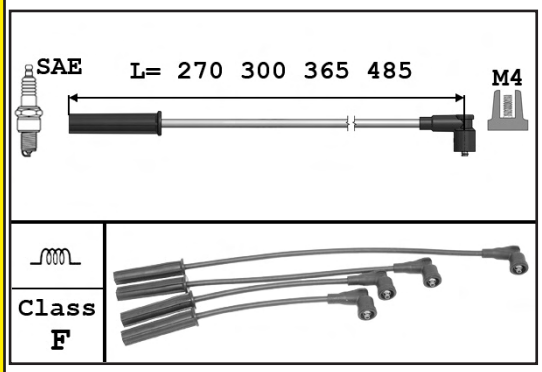

1.4i MPi	K7J700/10/14
1.6i	K7M718 K7M800/12/18/28
1.6i MPi	K7M410 K7M710/14/18/32/64 K7M800/12/18/28

Logan II

9284012 — **OE** 224404659R

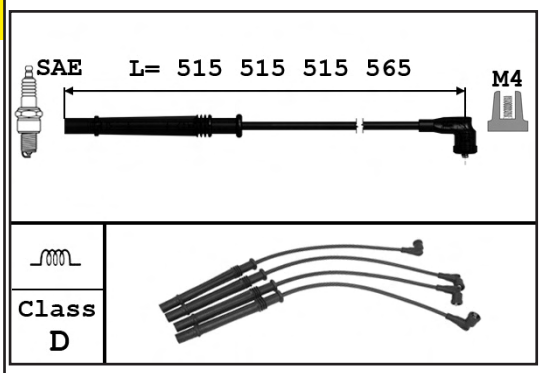

1.0i 16v.	D4D754
1.2i 16v.	D4F732/34

9284005 — **OE** 224404252R

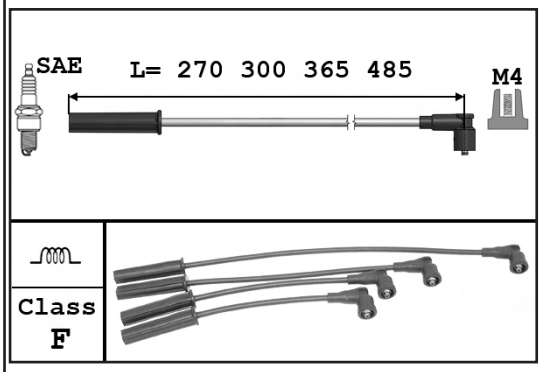

1.6i 8v.	K7M764 812

Lodgy

9284005 — **OE** 224404252R

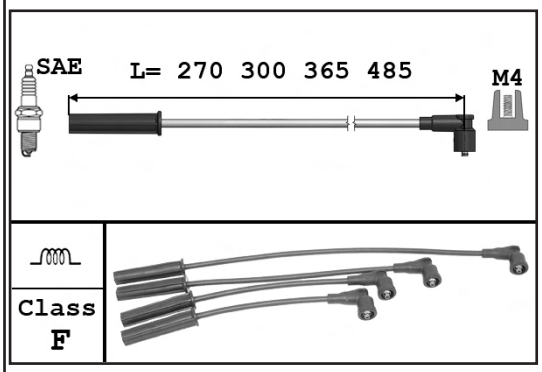

1.6i	K7M812/28

Sandero I

9284012

OE 224404659R

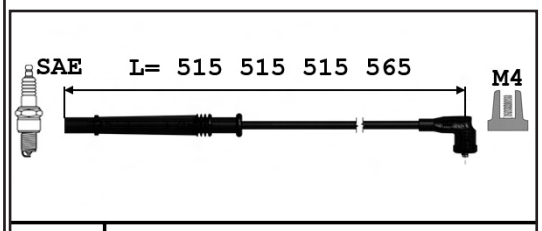

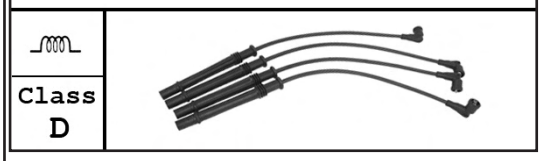

1.0i 16v. 1.2i 16v.	D4D760 D4F732/34

9284005

OE 224404252R

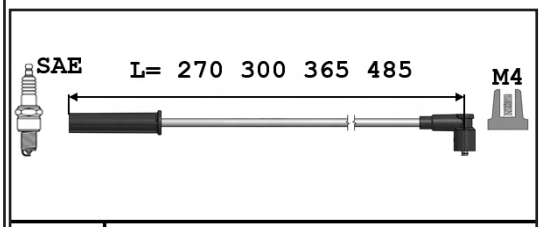

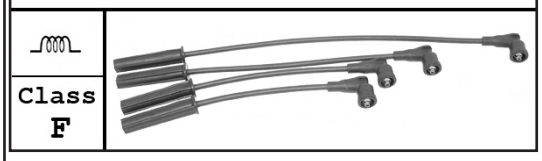

1.4i MPi 1.6i MPi	K7J700/10/14 K7M710/14/18/32/64 K7M800/12/18/28

Sandero II

9284012

OE 224404659R

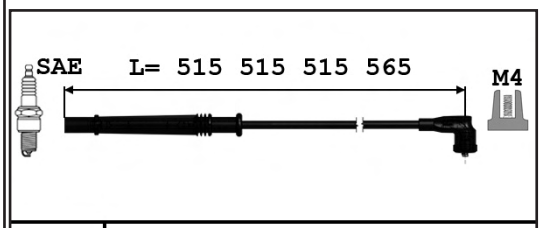

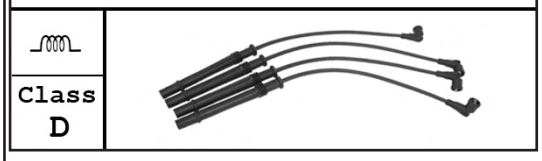

1.0i 16v. 1.2i 16v.	D4D754 D4F732/34

9284005

OE 224404252R

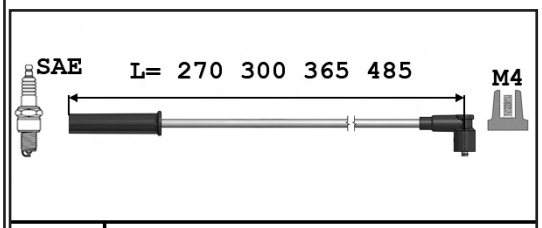

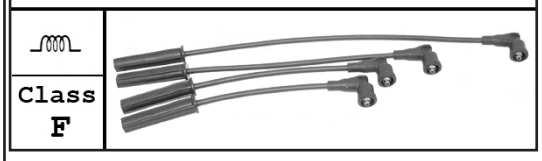

1.6i 8v.	K7M764 812

DAEWOO

Kalos

9286055

OE 96288956

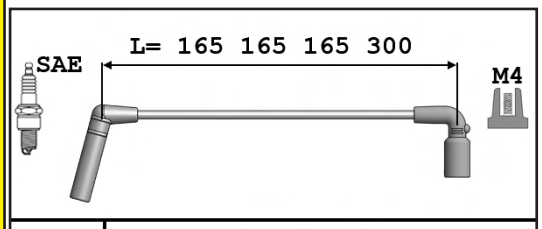

R

Class C

1.2i	B12S1

9286058

OE 96305387

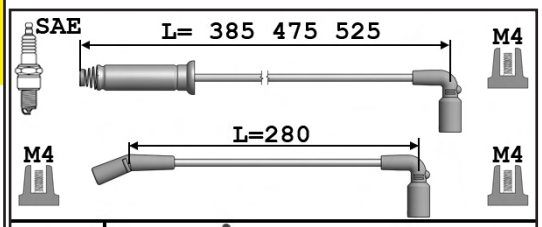

R

Class C

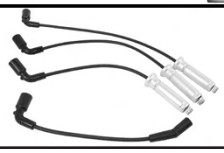

1.4i	-12/04	F14S3

9286003

OE 96497773

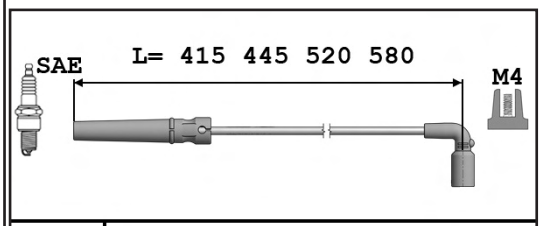

R

Class C

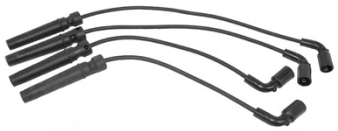

1.4i 16v.	F14D3

Lacetti ...

9286003

OE 96497773

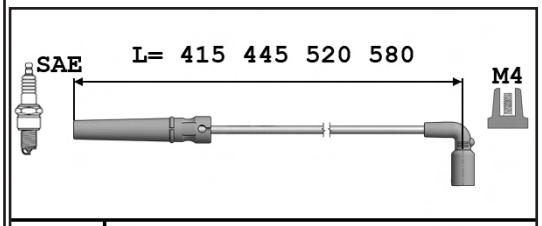

R

Class C

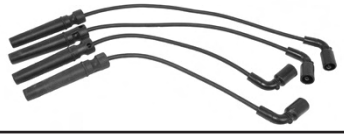

1.4i /GPL	F14D3

... Lacetti

9286022	OE 96190263	
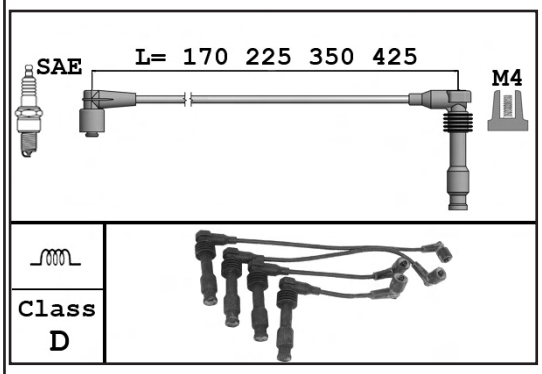	1.8i 16v.	T18SED

Lanos

9286058	OE 96305387	
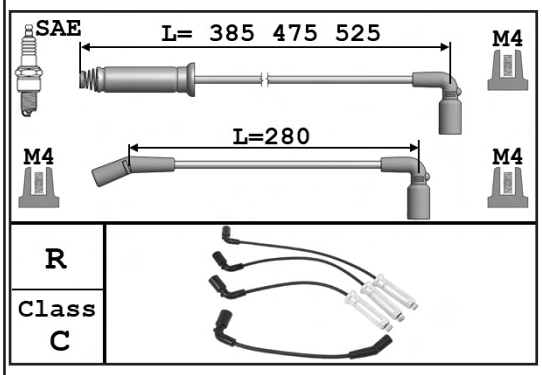	1.3i /GPL 1.5i /GPL	A13SMS A14SMS A15SMS

9286003	OE 96497773	
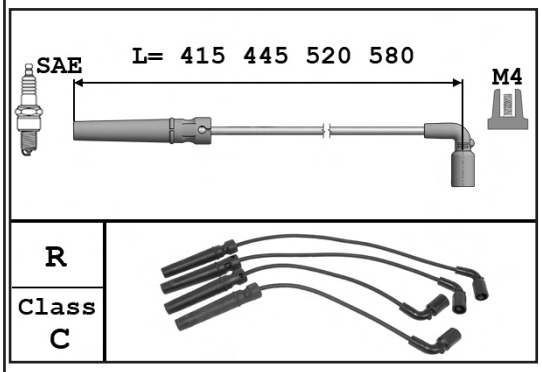	1.6i 16v. /GPL	A16DMS

Matiz ...

9286063	OE 96256433	
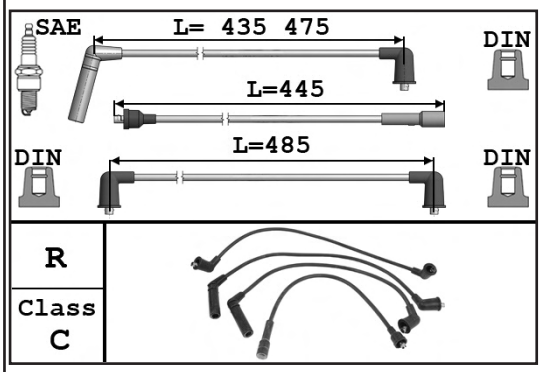	0.8i 6v.	F8CV

DAEWOO

... Matiz

9286055	OE 96288956	
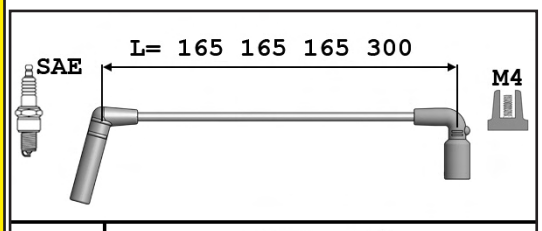	1.0i	B10S/S1
R Class C		

Nubira

9286003	OE 96497773	
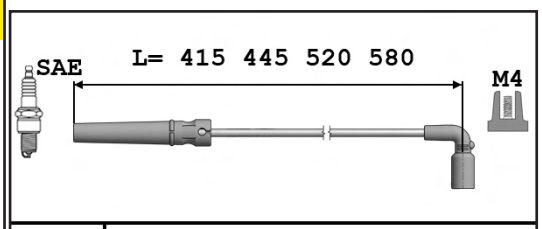	1.6i 16v. /GPL	A16DMS
R Class C 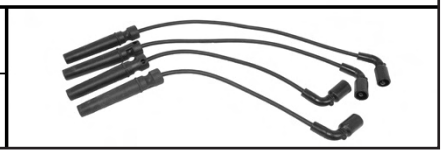		

Rezzo

9286058	OE 96305387	
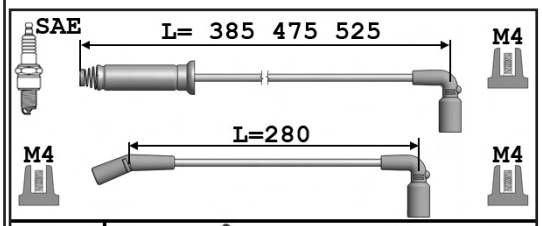	1.8i	F18D2 F18S2
R Class C 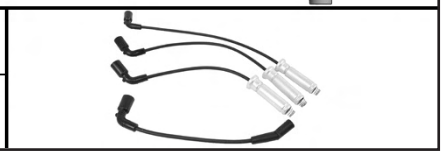		

500 (3 Portes)

9286045

OE 55195775+55195776

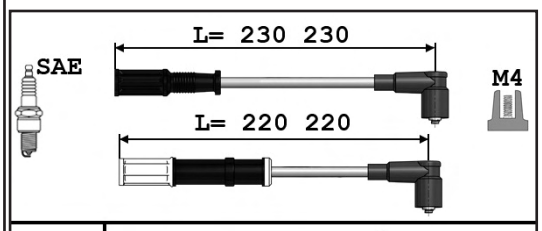

1.2i 8v. Sauf GPL	07/07-	169A4000

Albea

9286047

OE 46474814

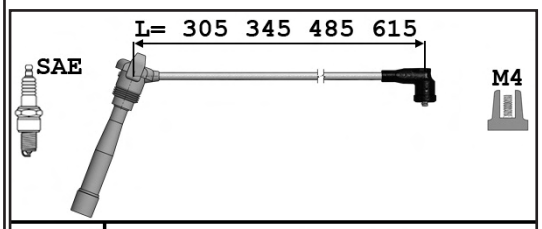

1.2i 16v.	188A5000

Brava

9286047

OE 46474814

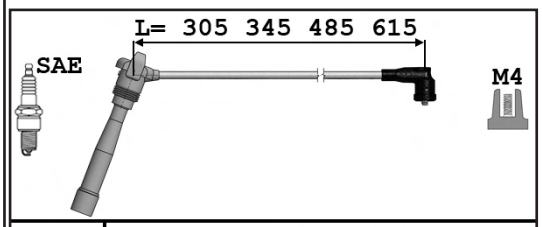

1.2i 16v.	182B2000 188A5000

9286009

OE 71776576

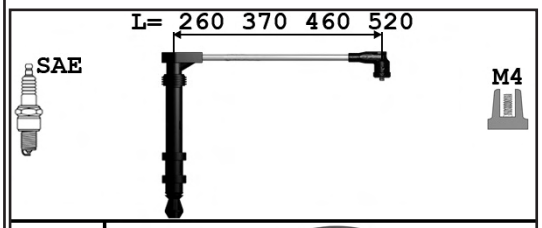

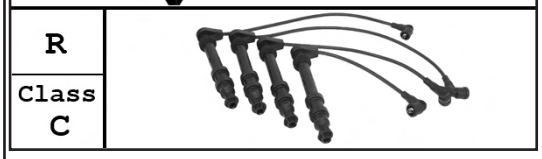

1.6i 16v. /GPL	182A4/6000

FIAT

Bravo

9286047	OE 46474814	
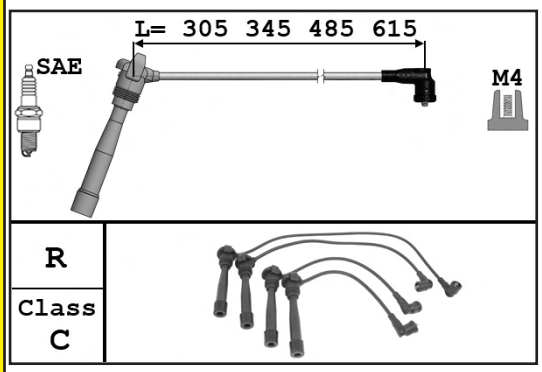	1.2i 16v.	182B2000 188A5000
9286009	**OE** 71776576	
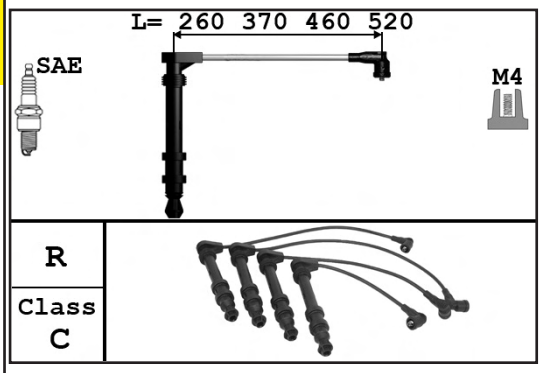	1.6i 16v. /GPL	182A4/6000

Cinquecento

9286017	OE 7776810	
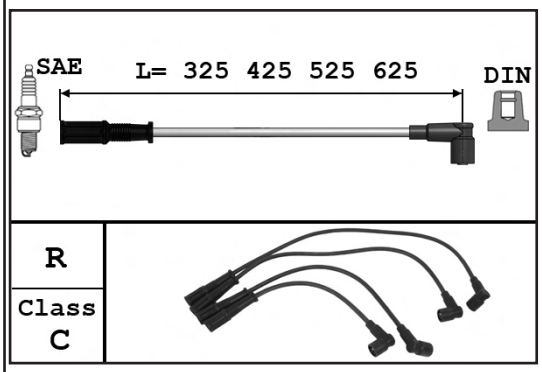	1.1ie	176B2000

Idea

9286045	OE 55195775+55195776	
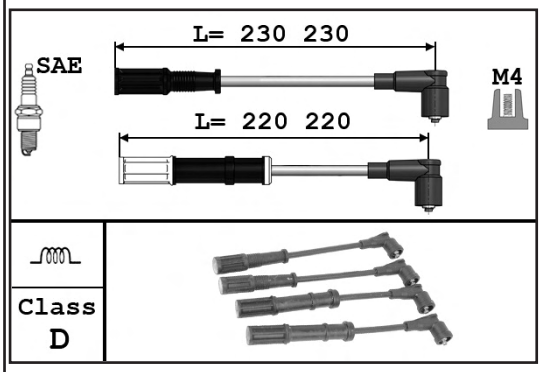	1.4i 8v. Sauf GPL	350A1000

Linea

9286045 — **OE** 55195775+55195776

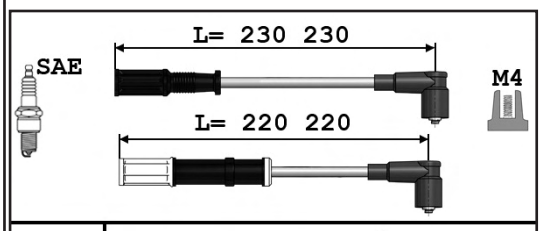

1.4i 8v.	05/07-	350A1000

Marea

9286047 — **OE** 46474814

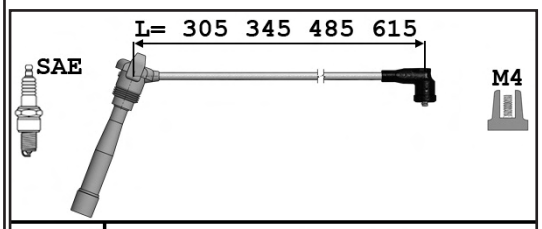

1.2i 16v.		182B2000

9286009 — **OE** 71776576

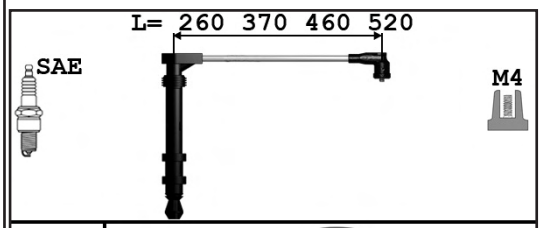

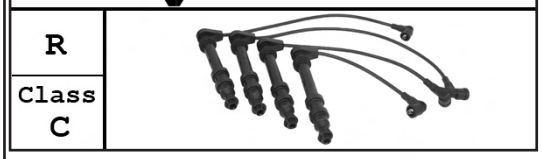

1.6i 16v. /GPL 1.6i 16v. /GNV		182A4000 185A3000 186A4000

Multipla

9286009 — **OE** 71776576

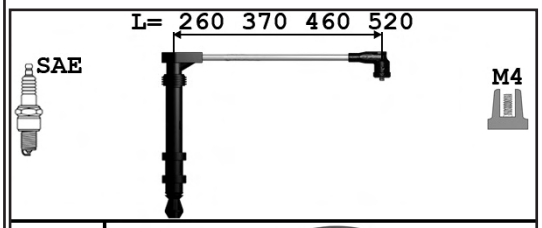

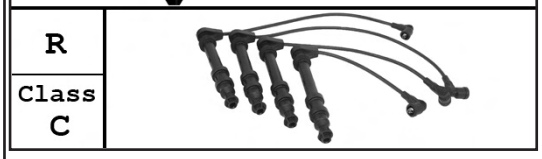

1.6i 16v. 1.6i 16v. GNV		182A4000 182B6000 182B6000 186A3/4000

FIAT

Palio

9286014

OE 46749624

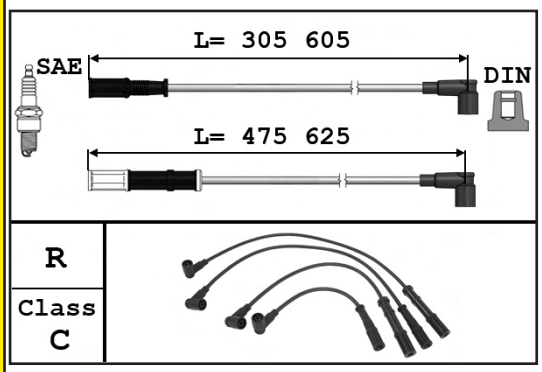

1.2i 8v. Depol. Euro 3

9286047

OE 46474814

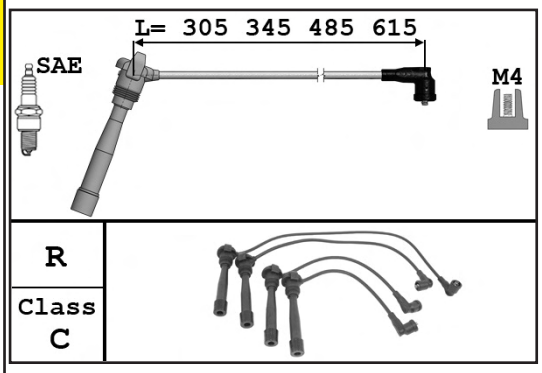

1.2i 16v.

188A5000

9286009

OE 71776576

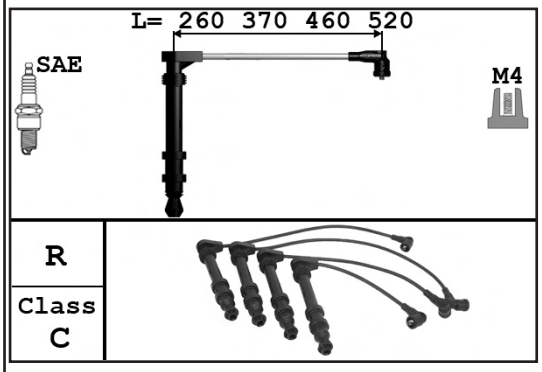

1.6i 16v. Week End /GPL

178B3000
182B6000

Panda ...

9286017

OE 7776810

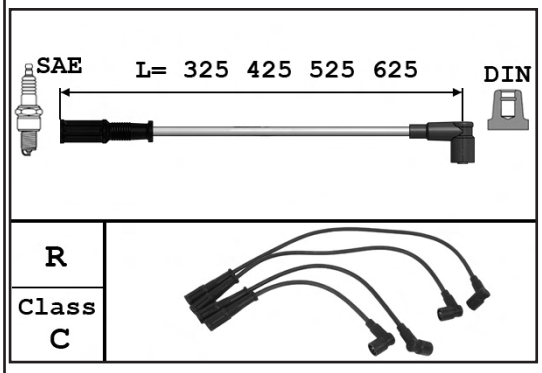

1.1ie /4WD
1.2i 8v. /4WD Sauf GNV GPL

187A1000
188A4000

... Panda

9286014 — OE 46749624

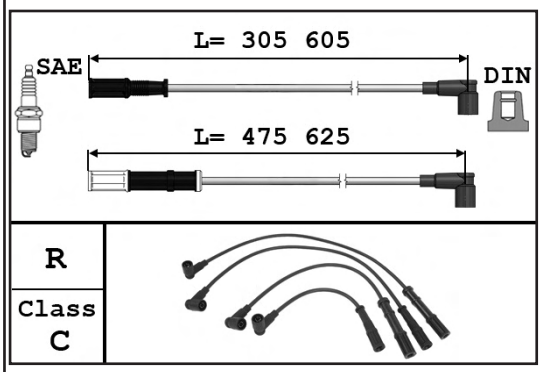

1.1ie /4WD Depol. Euro 3		156C046 176B2000 -M 2939661
1.2i 8v. GNV /GPL	-05/09	188A4000 -M 2939661

9286045 — OE 55195775+55195776

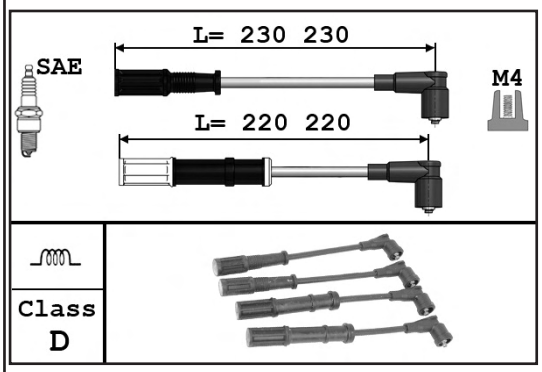

1.2i 8v. Sauf GPL	10/09-	169A4000 188A4000

Punto ...

9286017 — OE 7776810

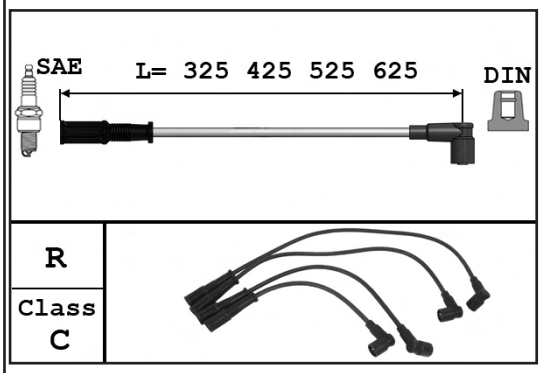

1.1i 1.2i 8v. /Cab. Sauf GNV /GPL		176A6000 176B2000 176A7/8000 176B1/4000 188A4000

9286014 — OE 46749624

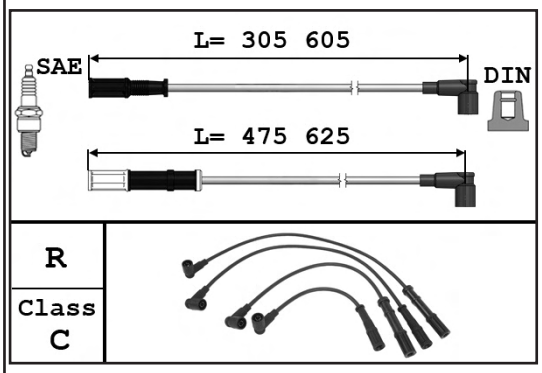

1.2i 8v. Bipower /GNV /GPL		176B4000 188A4000

FIAT

... Punto

9286045

OE 55195775+55195776

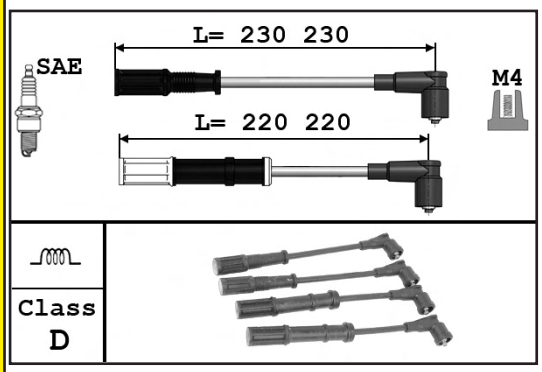

1.2i 8v. Sauf GPL	169A4000
1.4i 8v. Sauf GPL	199A7000 350A1000

9286064

OE 46425912

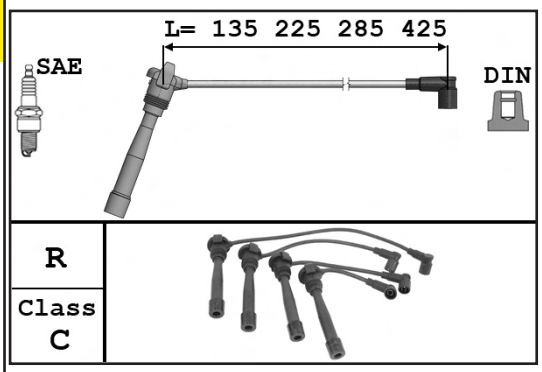

1.2i 16v. /Cab.	-09/00	176B9000

9286047

OE 46474814

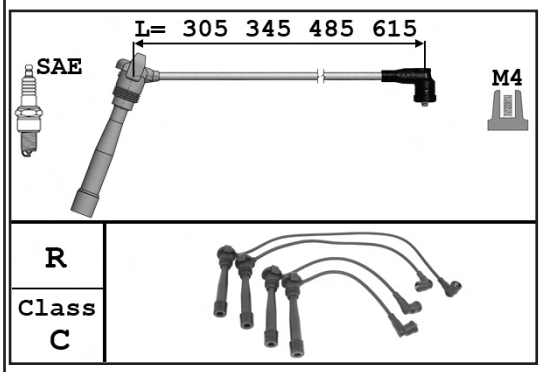

1.2i 16v.	188A5000

Grande Punto

9286045

OE 55195775+55195776

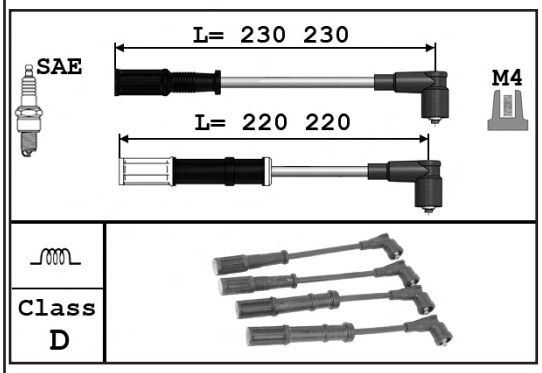

1.2i 8v. Sauf GPL	169A4000 199A4000
1.4i 8v. Sauf GPL	199A7000 350A1000

Punto Evo

9286045 — **OE** 55195775+55195776

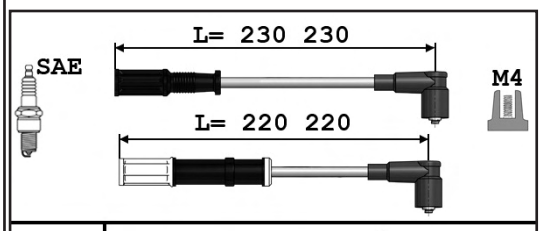

1.2i 8v. 169A4000
1.4i 8v. Sauf GPL 199A7000 350A1000

Seicento

9286017 — **OE** 7776810

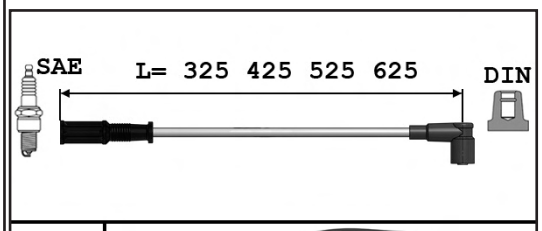

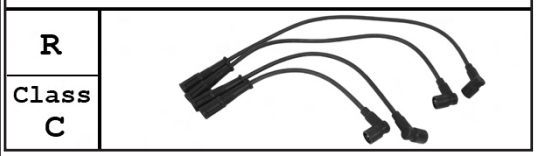

1.1i 187A1000

9286014 — **OE** 46749624

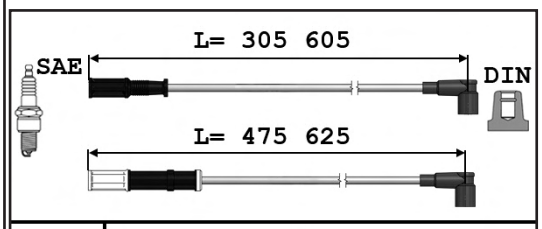

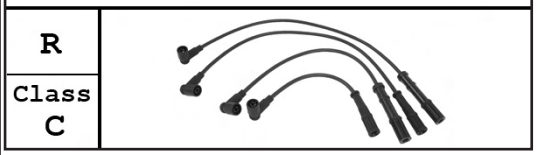

1.1ie 176B2000

Siena

9286014 — **OE** 46749624

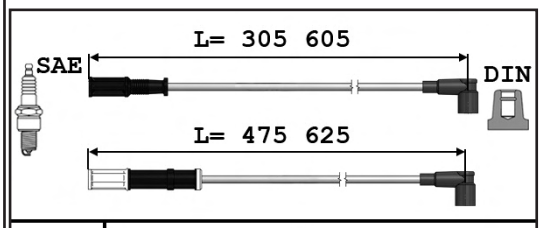

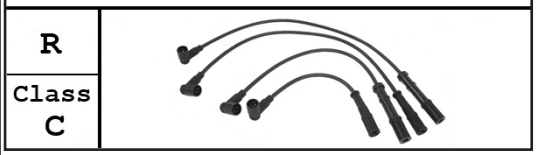

1.2i 8v. Depol. Euro 3

Doblo

9286014

OE 46749624

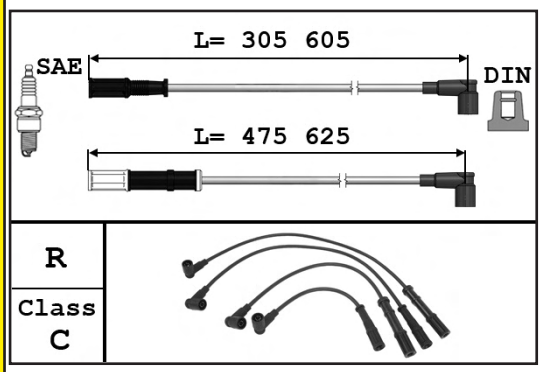

1.2i 8v. Depol. Euro 3 -12/05

9286045

OE 55195775+55195776

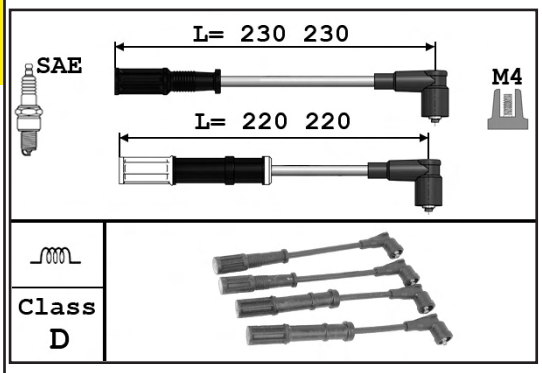

1.4i 8v. 01/06-12/09 350A1000

Ducato 94-01

9280001

OE 9609493380

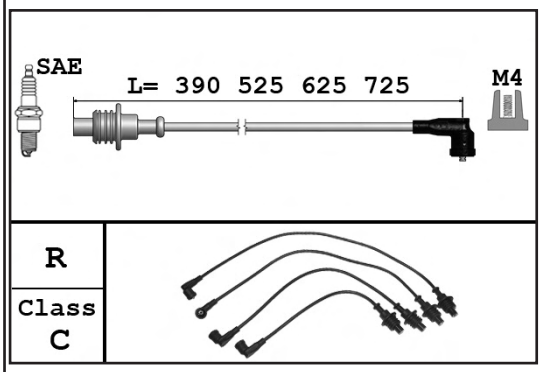

2.0i XU10J2

Strada ...

9286017

OE 7776810

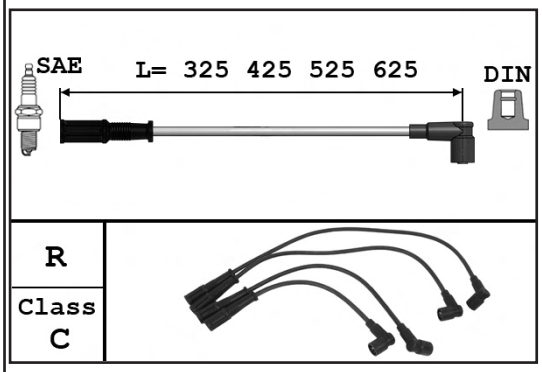

1.2i 8v. 178B5000

FIAT

... Strada

9286014 — **OE** 46749624

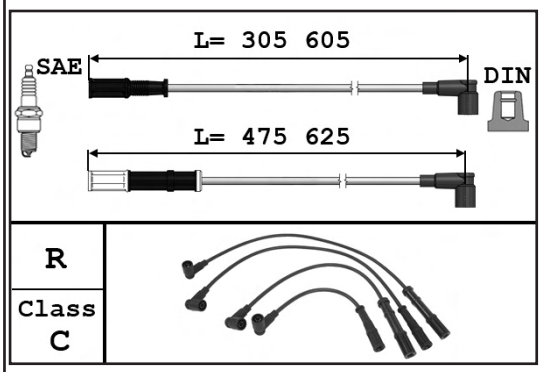

1.2i 8v.	188A4000

FORD

C-Max

9286031 — **OE** 1335369+1335371+1335374+1335377

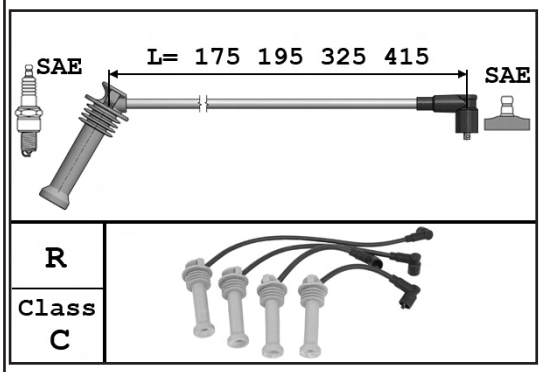

1.6i 16v.	15/09/03-26/03/07	HWDA/DB HXDA

9286043 — **OE** 1502365+1502366+1502367+1502368

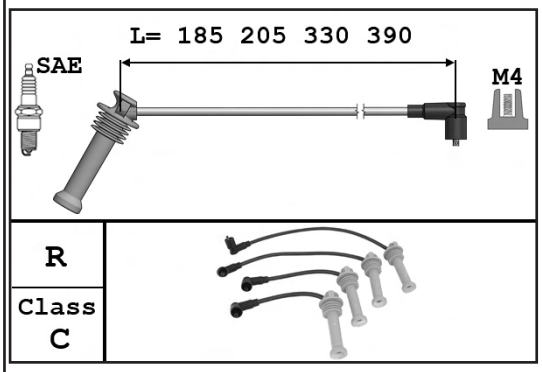

1.6i 16v. /Turbo	27/03/07-

FORD

Cougar

9286079 — **OE** 1092379+1114743+1114744+1114745

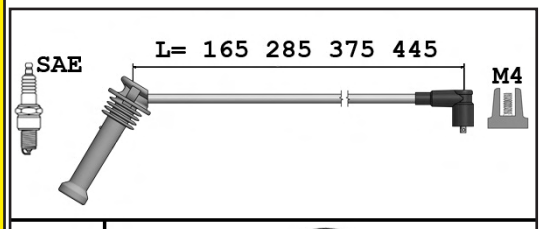

R
Class C

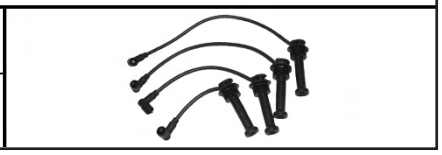

2.0i 16v.	EDBA/BB/BC/BD

Escort

9286054 — **OE** 1202513

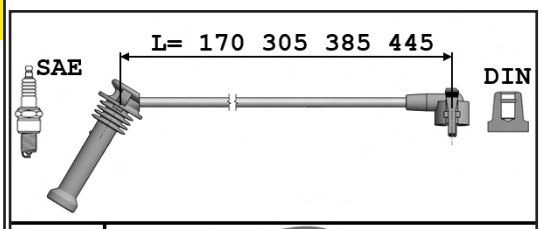

R
Class C

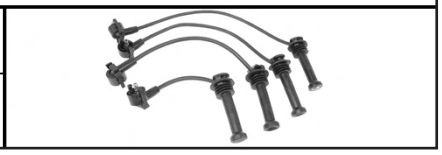

1.6i 16v.	L1E L1H L1K
1.8i	RDA
1.8i 16v.	RKC RQB

Fiesta 89-95 FA/B/V

9286054 — **OE** 1202513

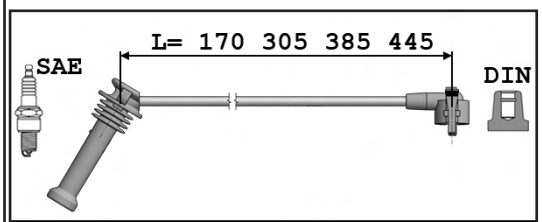

R
Class C

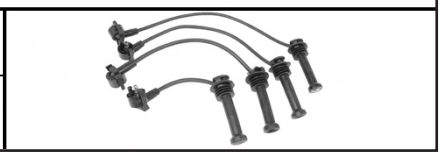

1.6i 16v.	L1G
1.8i 16v.	RDB
1.8i 16v. XR2	RQC

Fiesta 95-02 JB FA/B JA/V ...

9286031 — **OE** 1335369+1335371+1335374+1335377

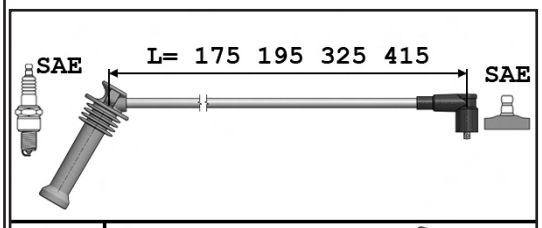

R
Class C

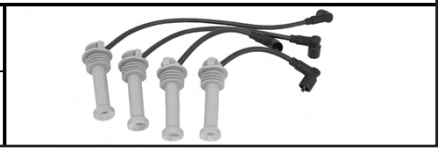

1.2i 16v. Zetec	01/06/98-	DHA/B/C/D/E/F/G
1.4i 16v. Zetec	01/06/98-	FHA FHE

... Fiesta 95-02 JB FA/B JA/V

9286054 — OE 1202513

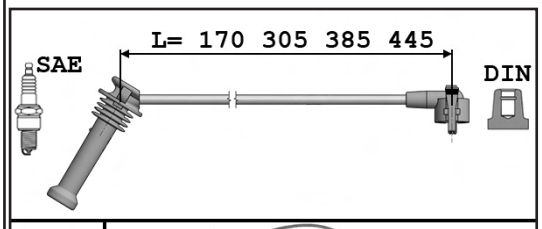

R
Class C

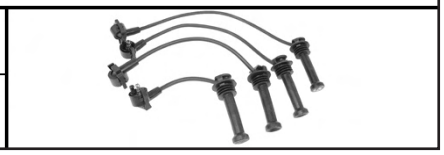

1.6i 16v.	L1T L1V

Fiesta 02-10/08 ...

9286031 — OE 1335369+1335371+1335374+1335377

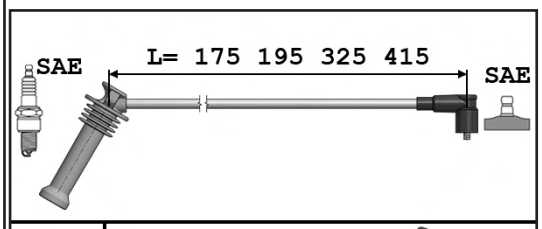

R
Class C

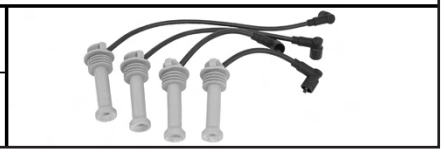

1.2i 16v.	28/10/02-01/02/07	FUJA/JB M7JA/JB
1.4i 16v.	30/11/01-01/02/07	FXJA/JB
1.6i 16v.	30/11/01-01/02/07	FYJA/JB

9286043 — OE 1502365+1502366+1502367+1502368

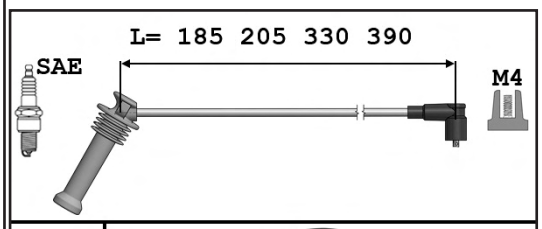

R
Class C

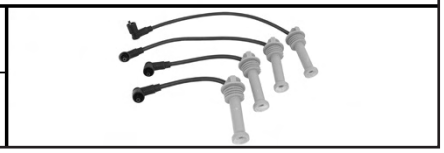

1.2i 16v.	01/02/07-
1.4i 16v.	01/02/07-
1.6i 16v.	01/02/07-

9286044 — OE 1214216

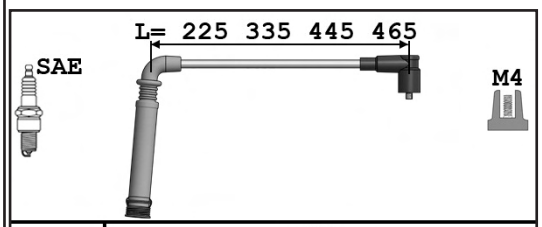

R
Class C

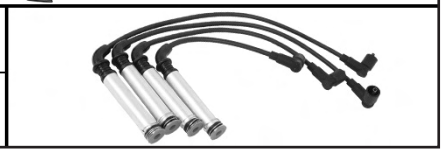

1.3i	05/02-02/07/02

FORD

... Fiesta 02-10/08

9286085

OE 1319060+1319061+1319062+1319063

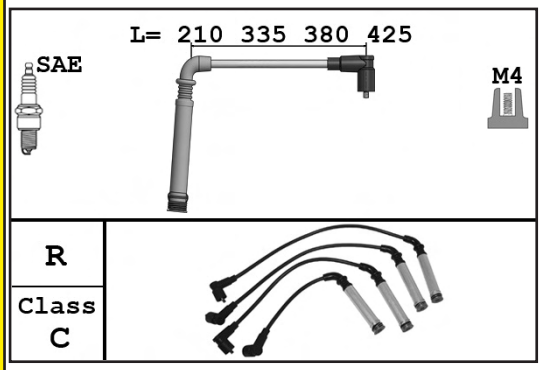

1.3i	03/07/02-	

9286049

OE 1231646+1255505+1255507+1255509

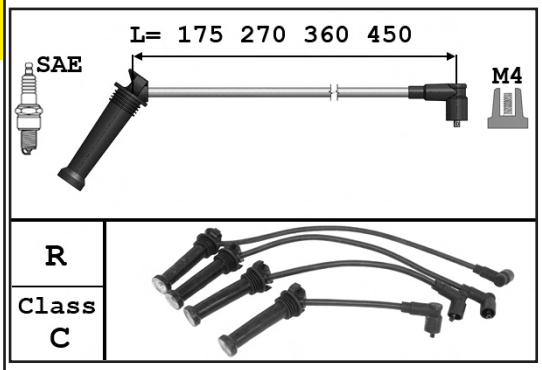

2.0i 16v.	15/11/04-	N4JB

Focus ...

9286031

OE 1335369+1335371+1335374+1335377

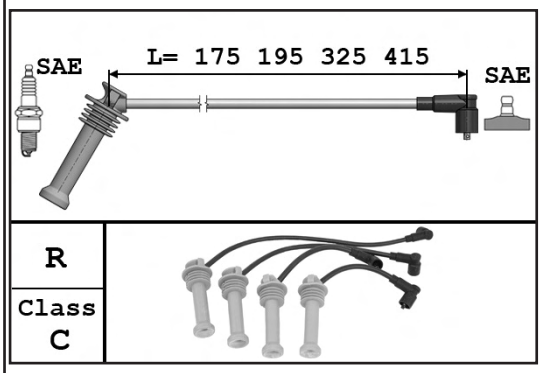

1.4i 16v. Zetec	15/08/98-09/05/05	FXDA/DB/DC/DD
1.6i 16v. Zetec	15/08/98-09/05/05	FYDA/DB FYDC/DD/DH
1.6i 16v. Cab.	17/07/06-26/03/07	HWDA/DB SHDA

9286043

OE 1502365+1502366+1502367+1502368

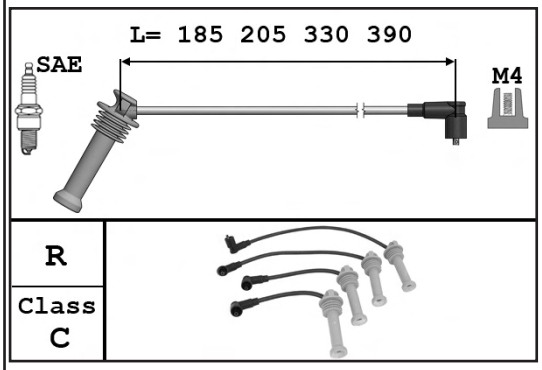

1.4i 16v.	-11/04	FXDA/DB/DC/DD
1.4i 16v.	26/03/07-	
1.6i 16v.	-11/04	FYDA/DB FYDC/DD/DH
1.6i 16v. /Turbo	26/03/07-	
1.6i 16v.	09/04-	HWDA/DB SHDA

... Focus

9286079 — **OE** 1092379+1114743+1114744+1114745

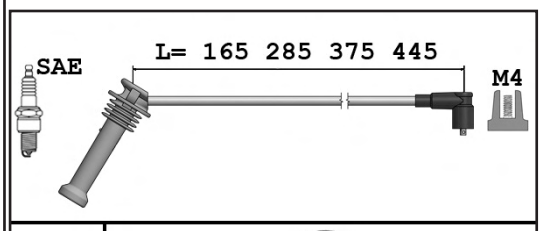

R
Class C

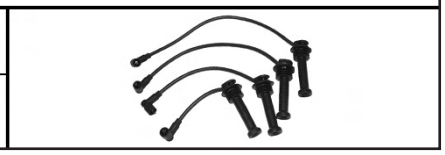

1.8i 16v.	EYDB/DC
2.0i 16v.	EYDD/DE/DF EDDB/DC/DD/DF

Fusion

9286031 — **OE** 1335369+1335371+1335374+1335377

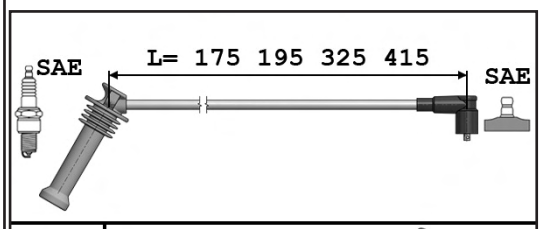

R
Class C

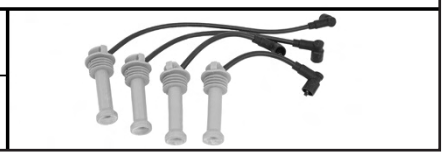

1.2i 16v.	FUJA/JB
1.4i 16v.	FXJA/JB
1.6i 16v.	FYJA

Galaxy

9286061 — **OE** 1111216+1111218+1111219+1111223

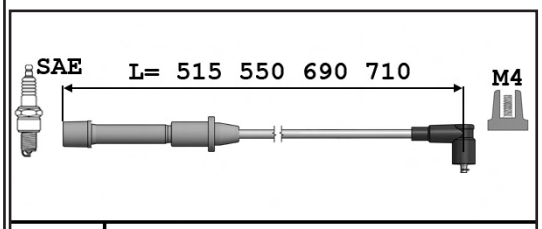

R
Class C

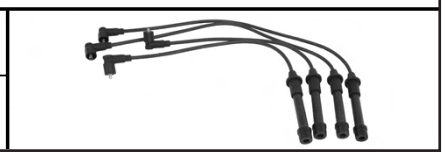

2.0i 16v.	01/01/01-31/08/06	

Ka ...

9286044 — **OE** 1214216

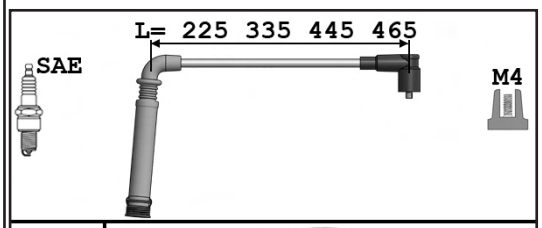

R
Class C

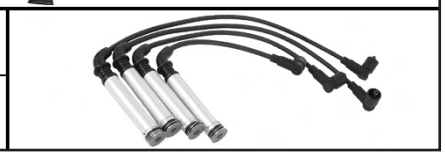

1.3i	-13/10/02	A9A A9B BAA

FORD

... Ka

9286085 — **OE** 1319060+1319061+1319062+1319063

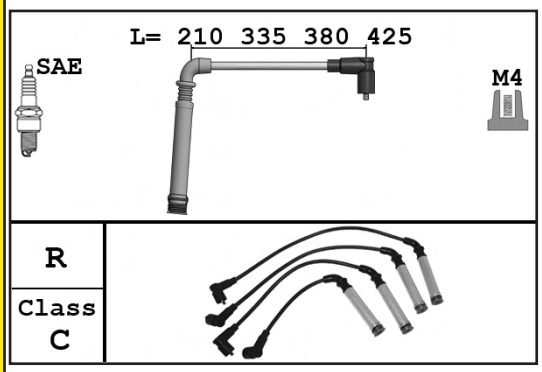

1.3i	14/10/02-	
1.6i		

Maverick

9286079 — **OE** 1092379+1114743+1114744+1114745

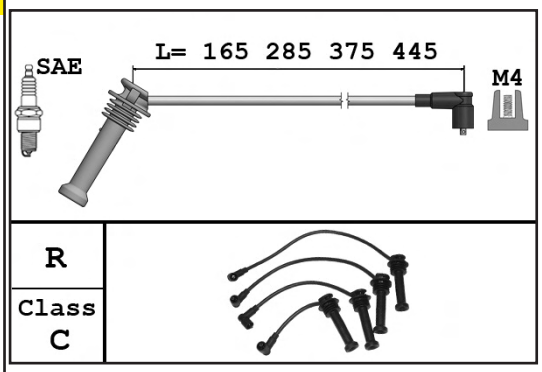

2.0i 16v.		EDDC

Mondeo ...

9286043 — **OE** 1502365+1502366+1502367+1502368

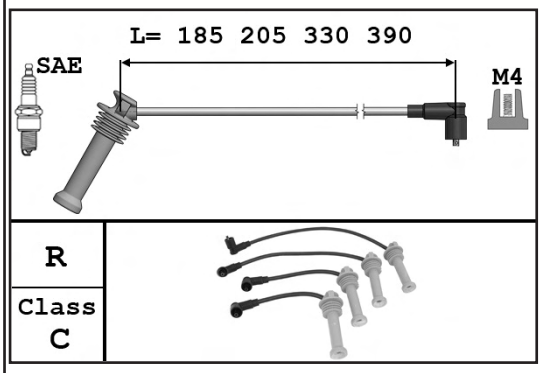

1.6i 16v. /Turbo	19/03/07-22/12/14	

9286054 — **OE** 1202513

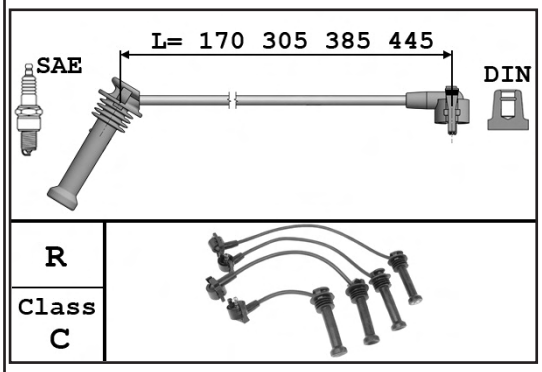

1.6i 16v.	-08/98	L1F L1J L1L L1N L1Q
1.8i 16v.	-08/98	RKB RKF RKH RKJ RKK
1.8i 16v. /4WD	-08/98	RKA
2.0i 16v. /4WD	-08/98	NGA
2.0i 16v.	-08/98	NGB NGC NGD

... Mondeo

9286079

OE 1092379+1114743+1114744+1114745

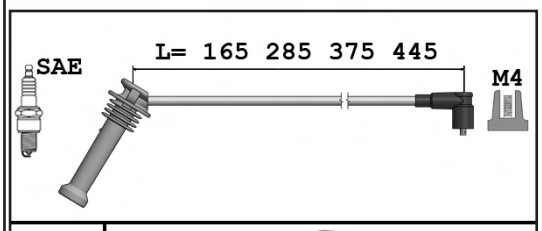

R
Class C

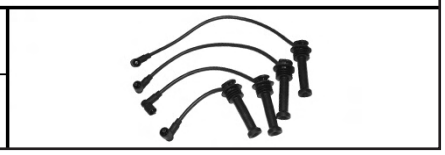

1.6i 16v.	09/98-	L1J L1L L1N L1Q
1.8i 16v.	09/98-	RKB RKF RKH
		RKJ RKK
2.0i 16v. /4WD	09/98-	NGA NGB
		NGC NGD

9286049

OE 1231646+1255505+1255507+1255509

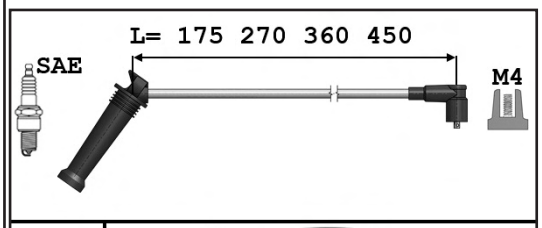

R
Class C

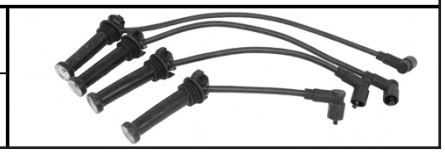

1.8i 16v.	09/00-06/07	CGBA/BB CHBA/BB
2.0i 16v.	09/00-06/07	CJBA/BB

Orion

9286054

OE 1202513

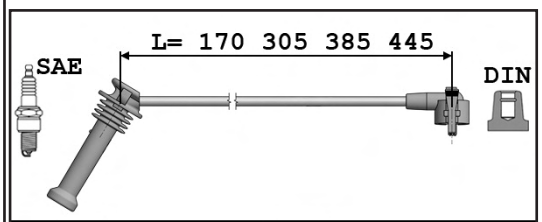

R
Class C

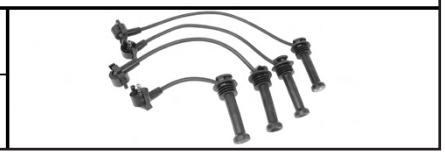

1.6i 16v.	L1E
1.8i 16v.	RDA

Accent ...

9286077

OE 2750122B00

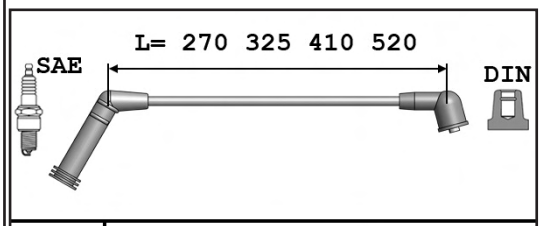

R
Class C

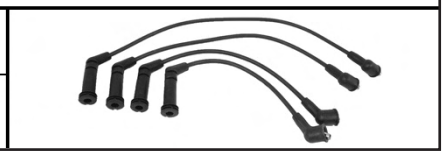

1.3i	-01/07/00
1.5i	-01/07/00

HYUNDAI

... Accent

9286007

OE 2750122B10

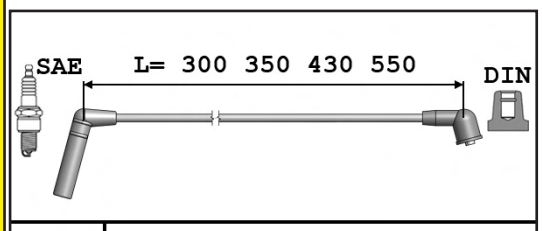

R
Class C

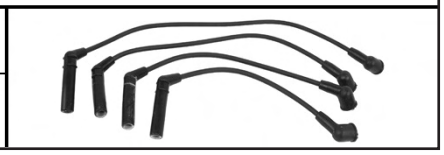

1.3i	01/07/00-
1.5i	01/07/00-

9286051

OE 2750126D00

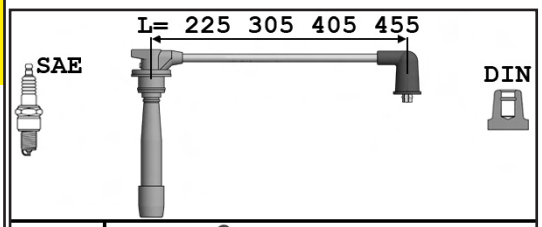

R
Class C

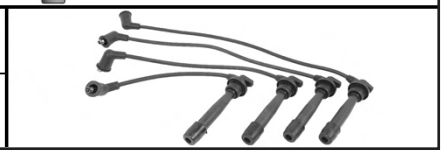

1.4i 16v.	01/01/06-02/01/07
1.5i	01/09/99-15/11/02
1.6i 16v.	15/11/02-31/12/06

Atos

9286077

OE 2750122B00

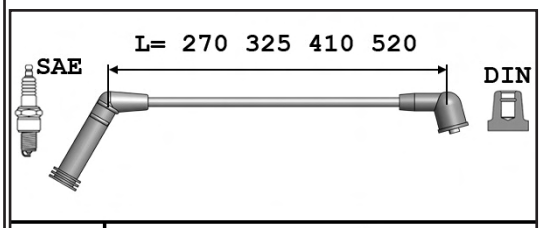

R
Class C

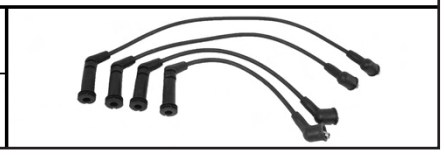

1.0i /Prime	14/08/00-15/04/03	G4HC

9286059

OE 2750102H00

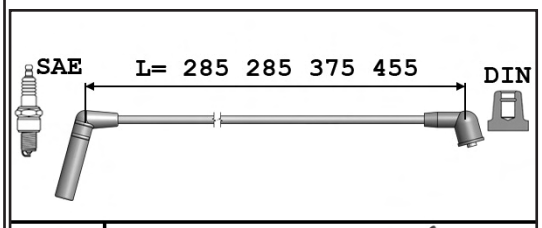

R
Class C

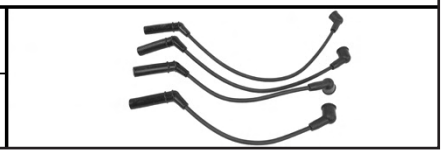

1.0i /Prime	15/04/03-31/12/03
1.1i 12v. Prime	01/06/05-02/01/07

Coupé

9286051

OE 2750126D00

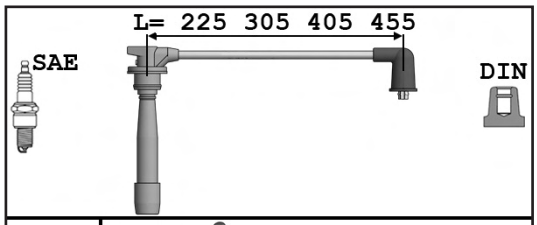

R
Class C

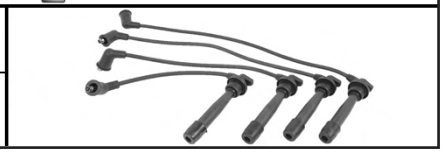

1.6i	01/05/00-31/12/06	

9286018

OE 2750123B70

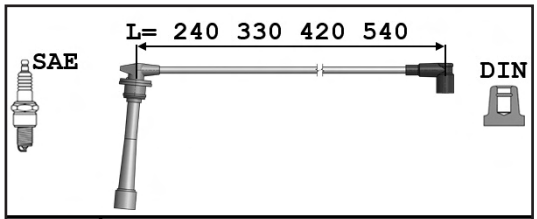

R
Class C

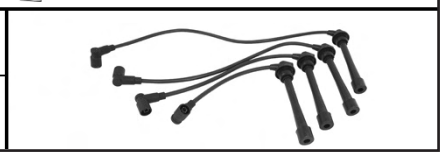

1.6i	-01/06/00	G4GR
2.0i	17/08/02-09/06	G4GC
2.0i	-09/01	G4GF G4GFEG

Elantra

9286051

OE 2750126D00

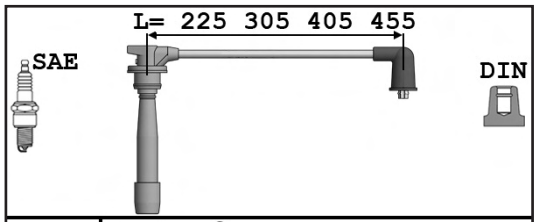

R
Class C

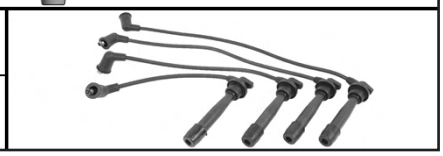

1.6i	01/06/00-23/08/06	

9286018

OE 2750123B70

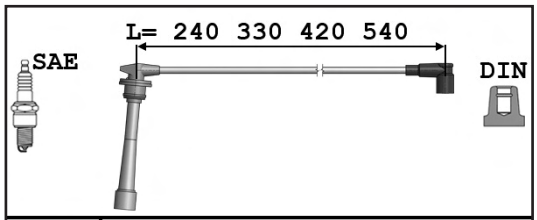

R
Class C

1.8i	17/08/02-23/08/06	G4GB/GM
2.0i	17/08/02-23/08/06	G4GC G4GCG

Getz

9286077

OE 2750122B00

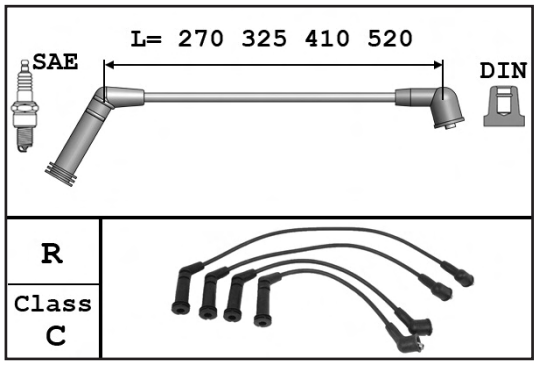

1.1i	G4HD

9286059

OE 2750102H00

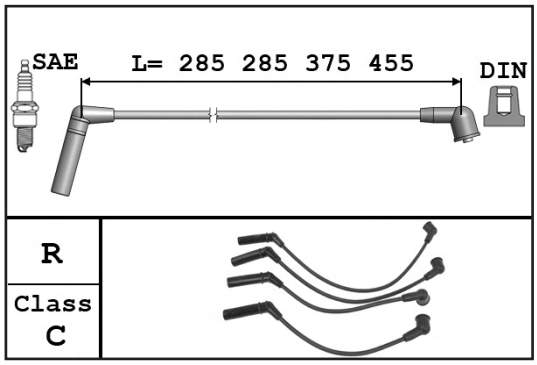

1.1i 12v.	15/04/03-31/12/06

9286007

OE 2750122B10

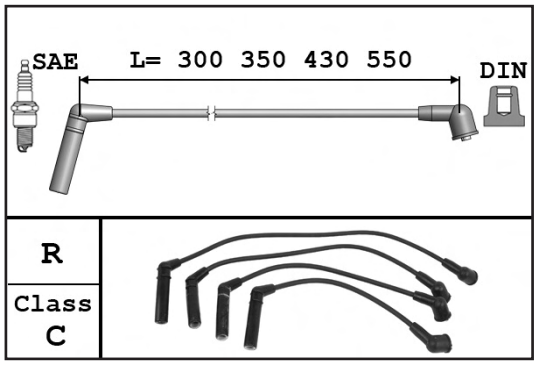

1.3i 12v.	G4EA

9286051

OE 2750126D00

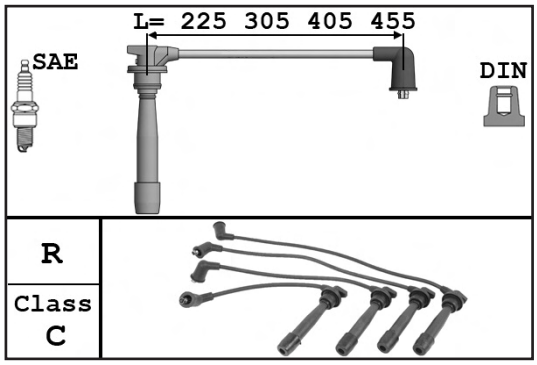

1.4i 16v.	01/08/05-31/12/06
1.6i 16v.	20/05/02-31/12/06

Lantra

9286018 — **OE** 2750123B70

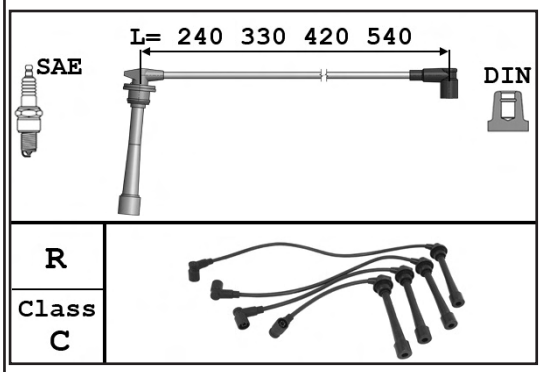

1.6i	-28/07/00	G4CR

Matrix

9286051 — **OE** 2750126D00

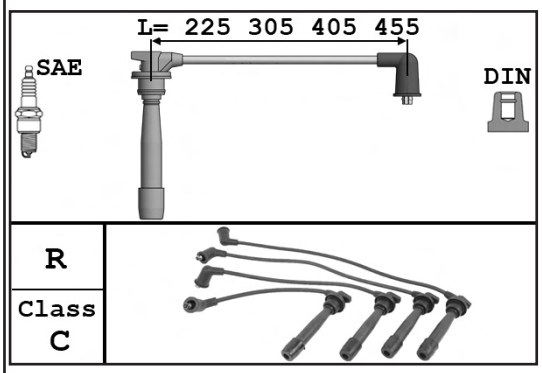

1.6i 16v.	15/05/01-06/02/07	

Trajet

9286018 — **OE** 2750123B70

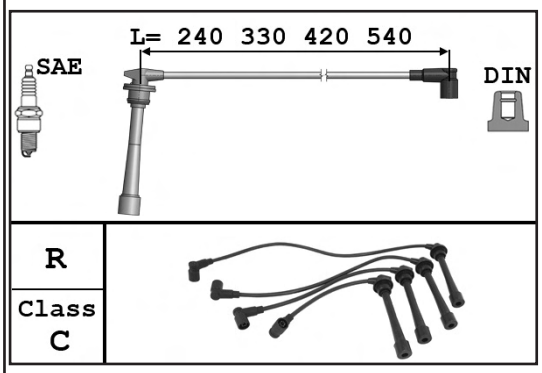

2.0i 16v.	01/02/04-31/12/06	G4DPE4 G4GC

Tucson

9286018 — **OE** 2750123B70

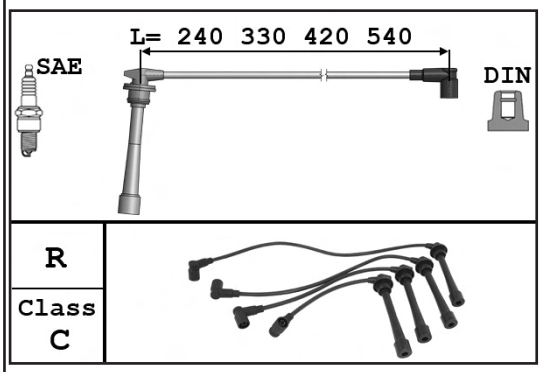

2.0i 16v.	01/04/04-31/12/06	G4GC

Carens

9286018 — **OE** 2750123B70

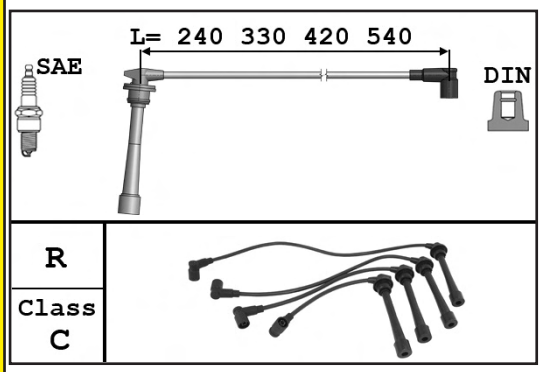

2.0i 16v.	01/09/04-01/08/06	G4GC

Ceed

9286018 — **OE** 2750123B70

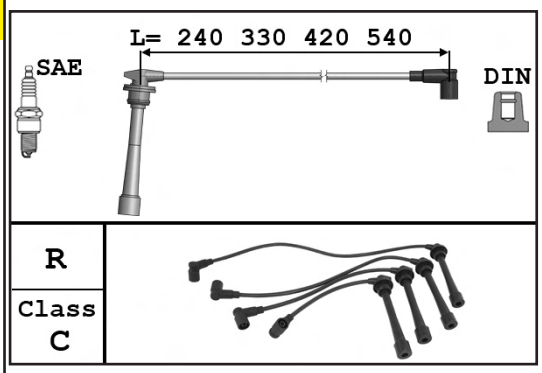

2.0i 16v.	27/10/06-27/06/11	G4GC

Cerato

9286051 — **OE** 2750126D00

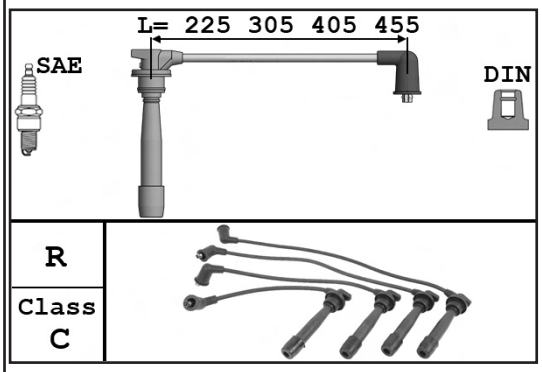

1.6i 16v.	15/02/04-19/10/06	

9286018 — **OE** 2750123B70

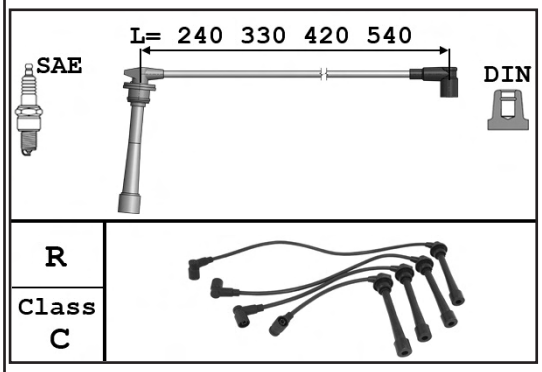

2.0i 16v.	15/02/04-12/11/08	G4GC

KIA

Rio

9286005		OE 7775810
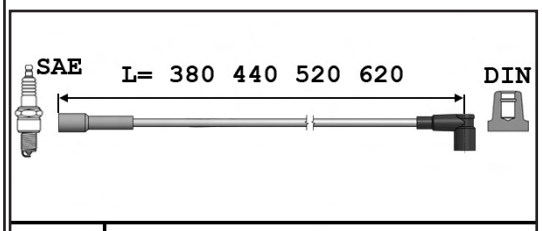	1.3i	A3E
R Class C 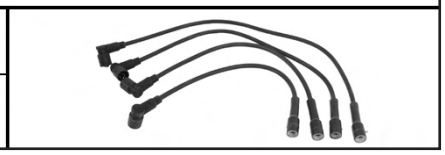		

Sportage

9286018		OE 2750123B70
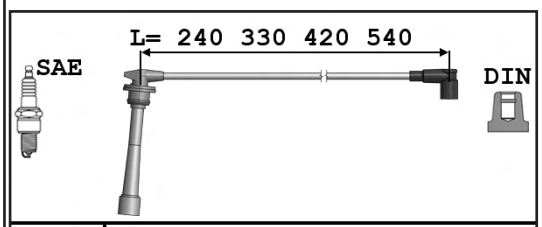	2.0i 16v. 25/08/04-15/01/10	G4GC
R Class C 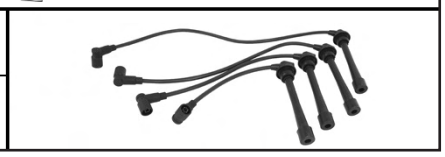		

LANCIA

Delta

9286009		OE 71776576
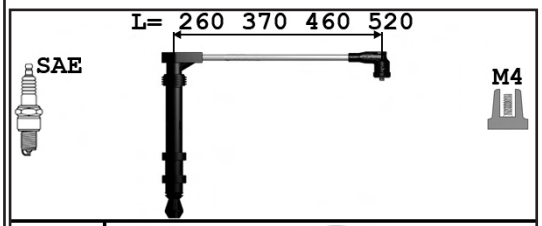	1.6ie	182A6000
R Class C 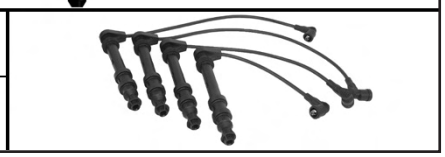		

Lybra

9286009		OE 71776576
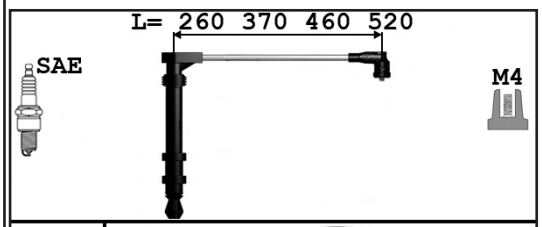	1.6i 16v.	182A4000 182B6000
R Class C 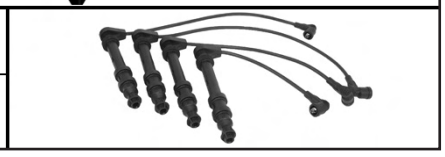		

Musa

9286045

OE 55195775+55195776

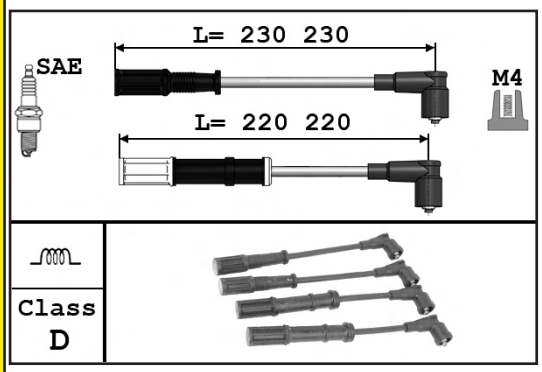

1.4i 8v. Sauf GPL	08/06-	350A1000

Y (Epsilon)

9286017

OE 7776810

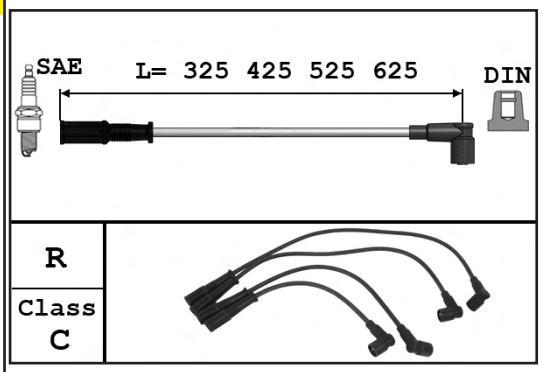

1.1ie 1.2i		176B2000 188A4000 840A3000

9286064

OE 46425912

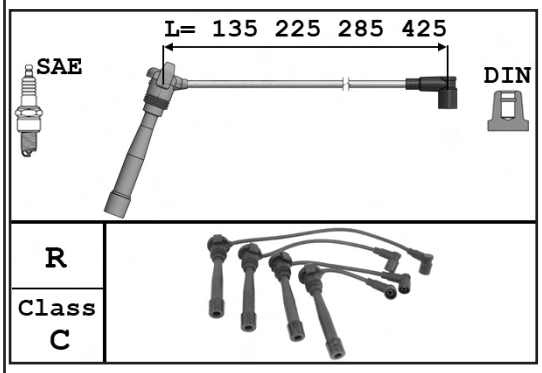

1.2i 16v.	-09/00	176B9000

9286047

OE 46474814

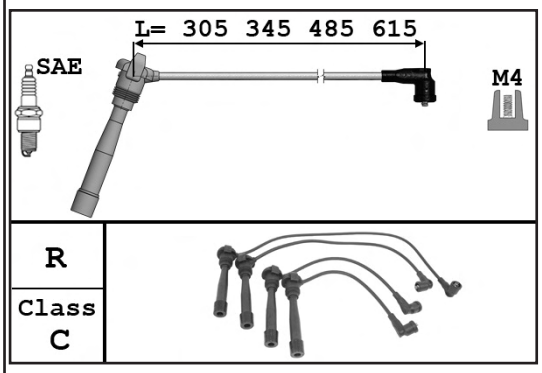

1.2i 16v.		188A5000

Ypsilon

9286014

OE 46749624

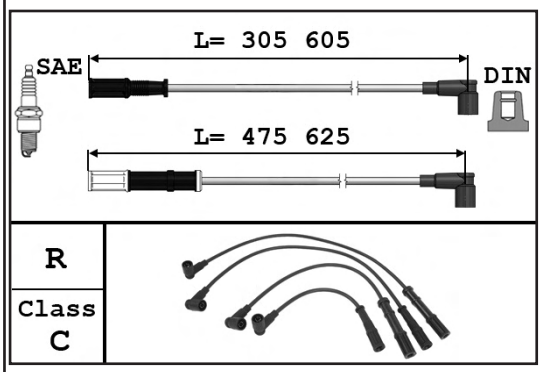

1.2i 8v.	188A4000 -M 2935743

9286045

OE 55195775+55195776

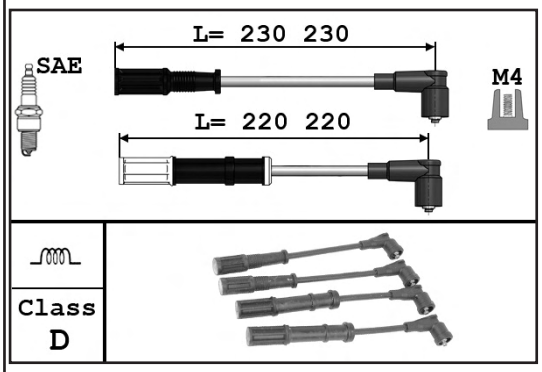

1.2i 8v. Sauf GPL	11/10-	169A4000
1.4i 8v. Sauf GPL	11/06-	350A1000

Y10

9284017

OE -

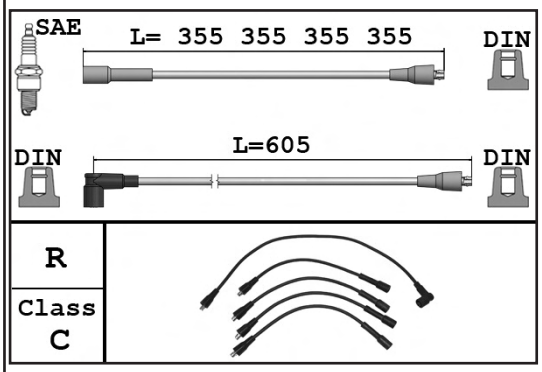

1.0 8v.	03/85-02/89

MAZDA

2

9286031 **OE** C20118160A+C20118170A+C20118180A+C20118190A

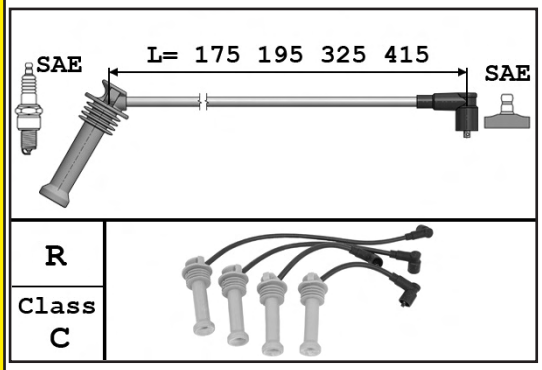

1.2i 16v.
1.4i 16v.
1.6i 16v.

FUJA
FXJA
FYJA

MERCEDES

Série 123 01/76-12/85

9286037 **OE** 1021502918

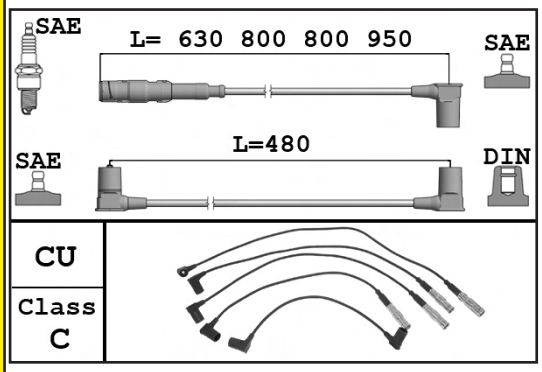

2.0 200
2.3 230

102920/39 115938/39
102980 115954

Série 124 12/84-06/98 ...

9286037 **OE** 1021502918

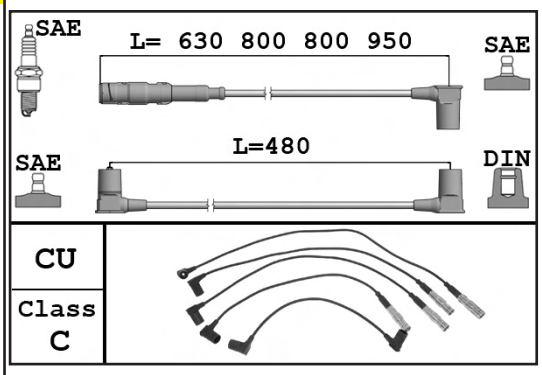

2.0 200
2.0i 200E /TE
2.3i 230E/CE/TE

102922
102963
102982

... Série 124 12/84-06/98

9286081 — **OE -**

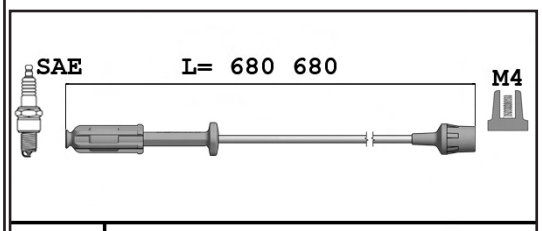

CU
Class C

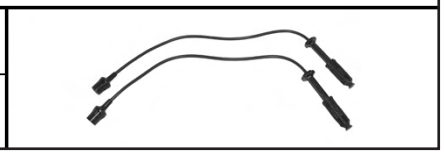

2.0i 16v. 200	09/95-	111940
2.2i 16v. 220	09/95-	111960

Série 190 (201) 10/82-08/93

9286037 — **OE** 1021502918

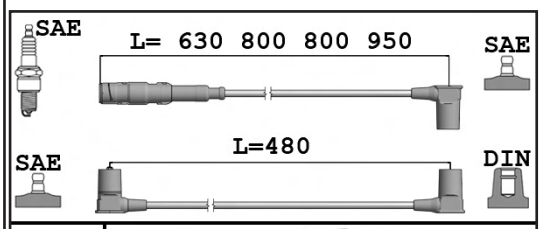

CU
Class C

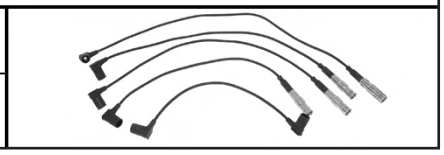

1.8i 190	102910
2.0i 190	102921/24/61/62
2.3i 190	102985

Classe A (169) 07/04-06/12

9286033 — **OE** 2661500118+2661500218+2661500618+2661500718

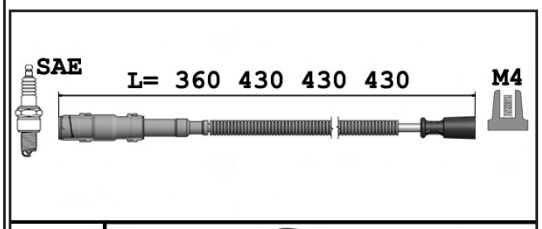

CU
Class C

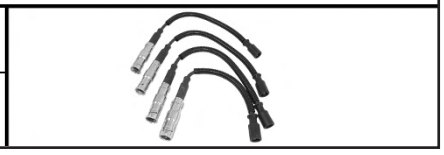

1.5i 150	266920
1.7i 170	266940
2.0i 200	266960

Classe B (245) 05/05-10/11

9286033 — **OE** 2661500118+2661500218+2661500618+2661500718

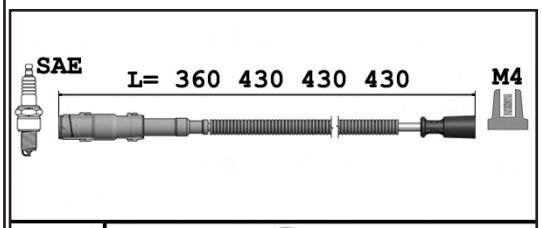

CU
Class C

1.5i 150	266920
1.7i 170	266940
2.0i 200	266960

Classe C (202) 03/93-05/00

9286081 — **OE -**

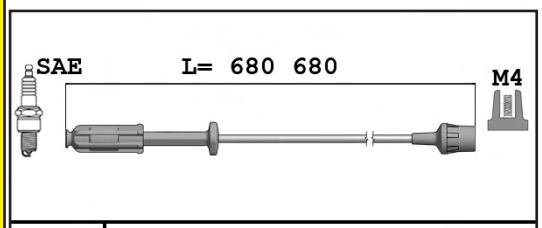

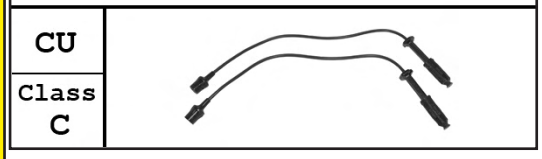

1.8i 16v. 180	09/95-05/00	111921
2.0i 16v. 200	09/95-05/00	111945
2.0i 16v. Komp 200	10/95-03/01	111944
2.2i 16v. 220	09/95-	111961
2.3i 16v. 230	-06/98	111974
2.3i 16v. Komp 230	-05/00	111975

Classe CLK Coupé (208) 06/97-06/02

9286081 — **OE -**

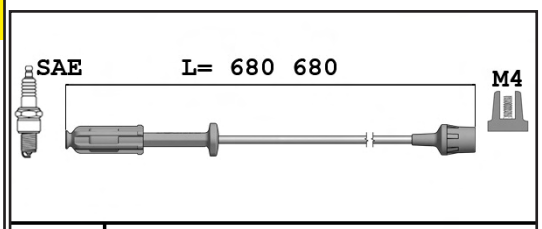

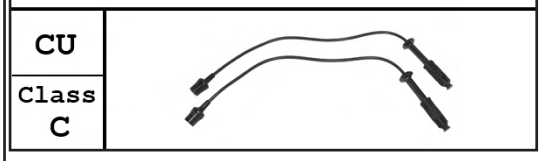

2.0i 200	111945
2.0i Komp 200	111944
2.3i Komp 230	111975

Classe E (210) 06/95-03/03

9286081 — **OE -**

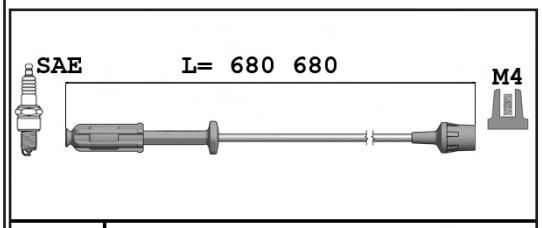

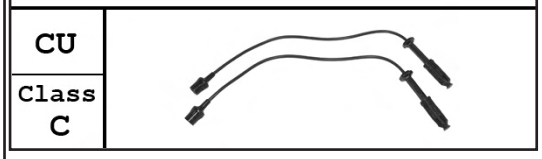

2.0i 16v. 200	111942

9286087 — **OE -**

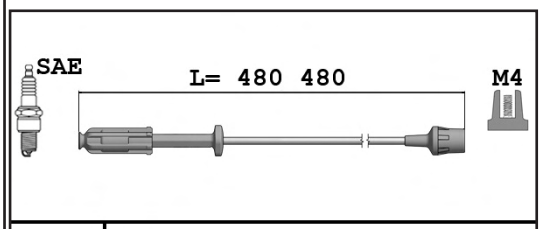

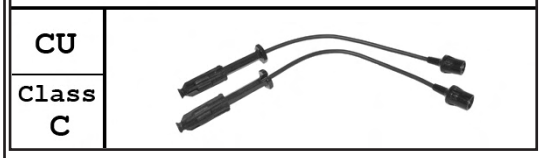

2.0i Komp 200	111947
2.3i 16v. 230	111970

Classe G 03/79-

9286037 — **OE** 1021502918

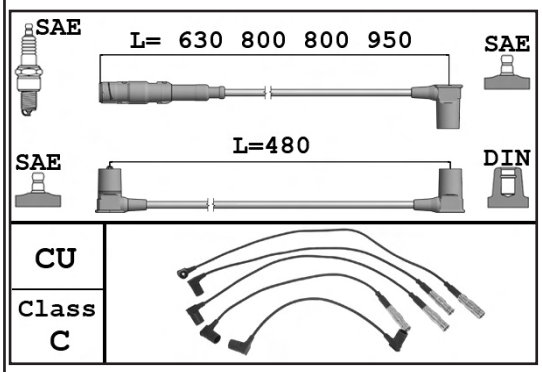

2.3i 230 4WD — 102979/81/87/89

Classe M

9286087 — **OE** -

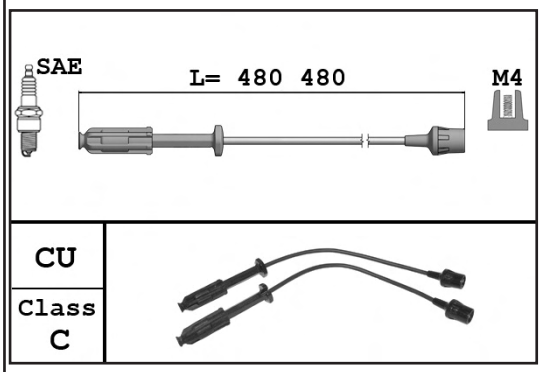

2.3i 230 4WD — 111977

Classe SLK (170) 04/96-04/04

9286087 — **OE** -

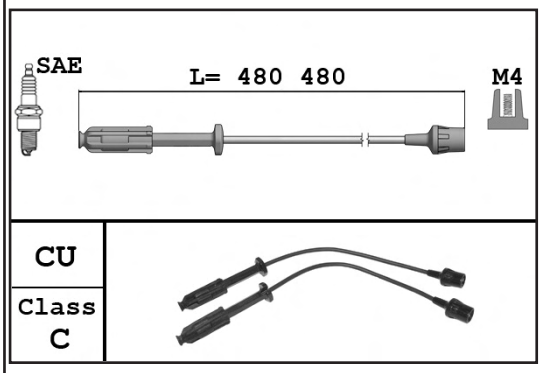

2.0i 16v. Komp 200 — 111958

9286081 — **OE** -

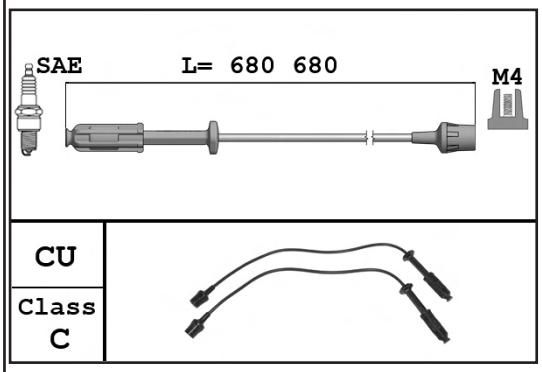

2.0i 16v. 200 — 111946
2.3i 16v. Komp 230 — 111973

MERCEDES

Classe V (638) 10/96-07/03

9286081	OE -	
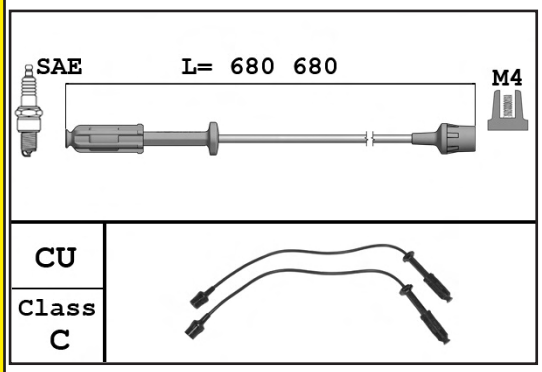	2.0i 16v. 200 2.3i 16v. 230	111948 111978

Sprinter

9286087	OE -	
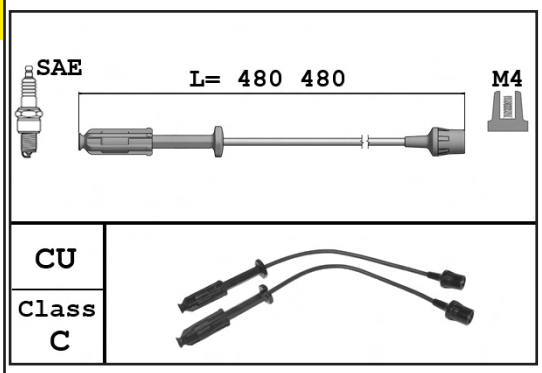	2.3i 214 314	111979/84

9286081	OE -	
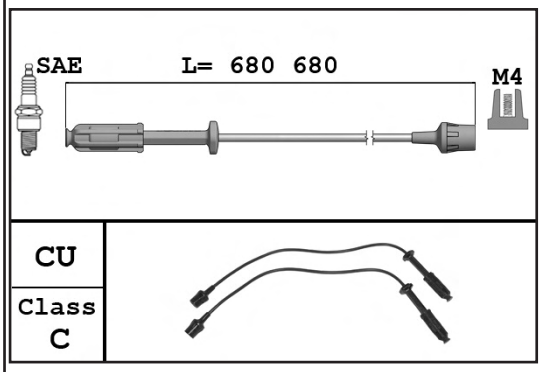	2.3i 214 314 414	111979 111984

Vito

9286081	OE -	
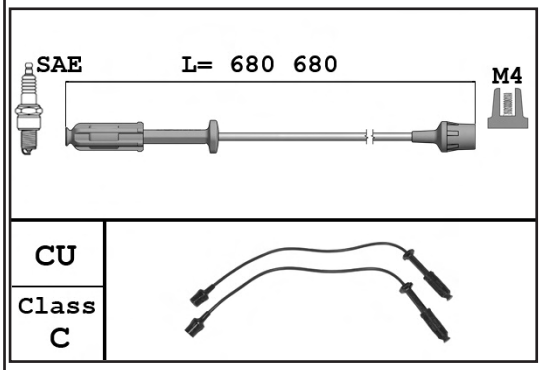	2.0i 16v. 113 2.3i 16v. 114	111948 111978

Mini R50 R53 06/01-08/06

9286029 **OE** 12127513032+12127513033+12127513034+12127513035

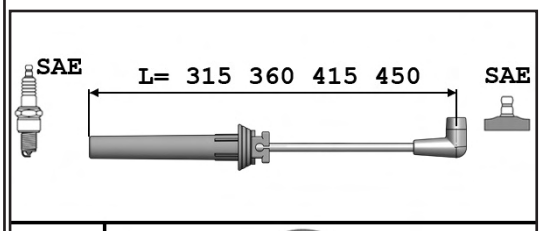

R
Class C

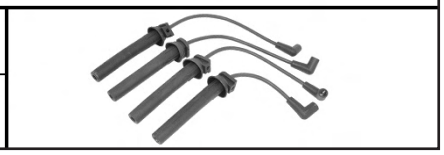

1.4i 16v.	W10B14A
1.6i 16v.	W10B16A
1.6i 16v. Komp	W11B16A

Mini Cab. R52 04/04-02/09

9286029 **OE** 12127513032+12127513033+12127513034+12127513035

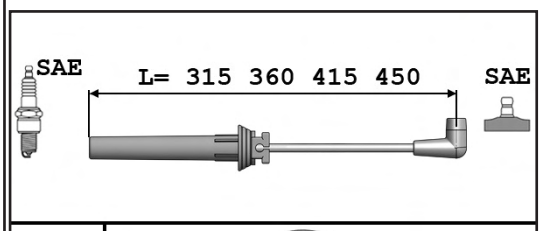

R
Class C

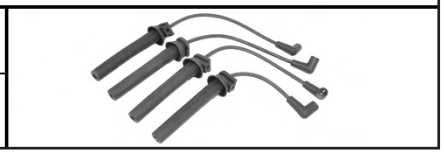

1.6i 16v.	W10B16A
1.6i 16v. Komp	W11B16A

100 NX

9286015 **OE** 224402J210

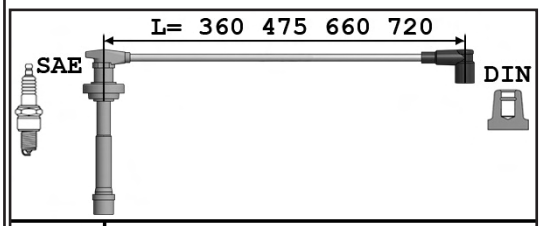

R
Class C

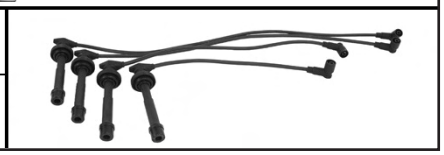

2.0 GTi	SR20DE

Almera

9286015 **OE** 224402J210

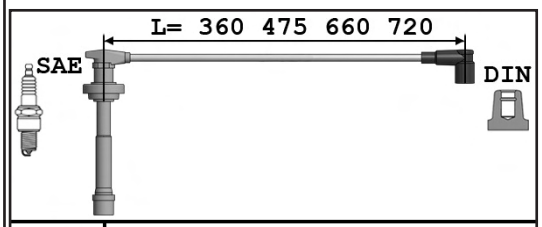

R
Class C

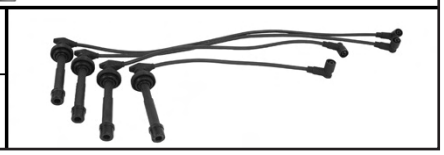

2.0 GTi	04/96-11/99	SR20DE

NISSAN

Primera

9286015 — OE 224402J210

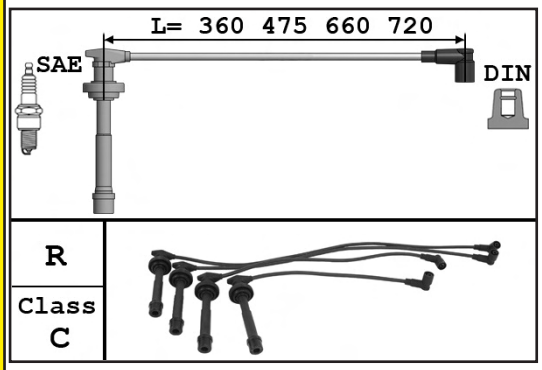

2.0i 16v.	04/96-11/99	SR20DE

OPEL

Astra F...

9286080 — OE 1612607

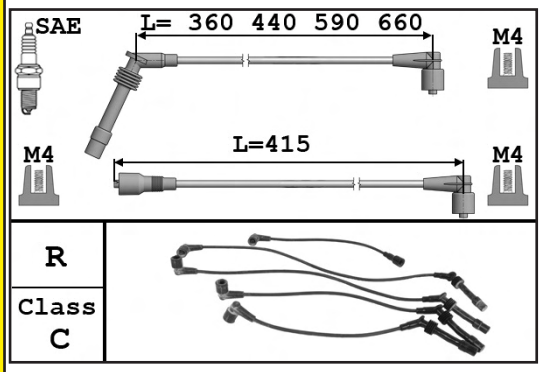

1.4i	08/95-03/98	C14NZ

9286002 — OE 1612608

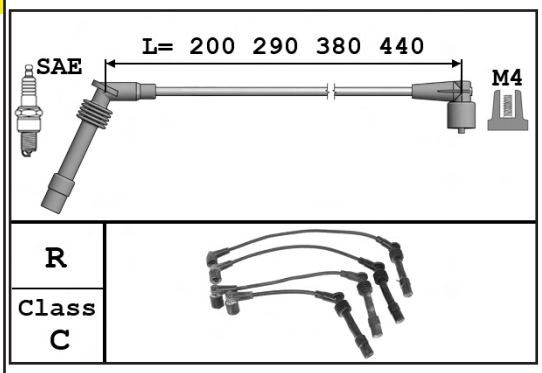

1.4i	08/95-09/98	C14SE M- 02BD0922
1.6i		X16SZ M- 02BE6167
1.6i	07/96-09/98	X16SZR

... Astra F

9286022 — **OE** 1612598

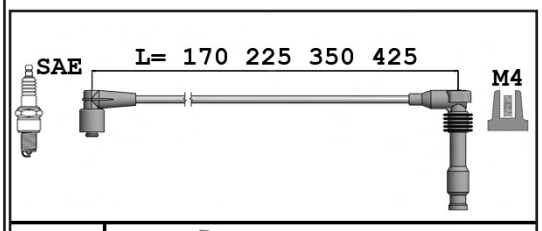

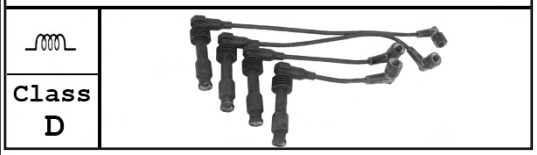

1.8i 16v.	C18XE C18XEL X18XE
2.0i 16v.	X20XEV

Astra G

9286002 — **OE** 1612608

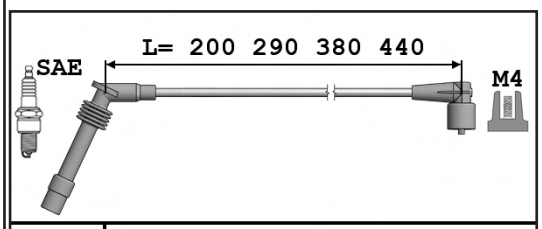

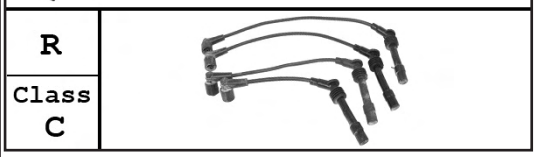

1.6i	Z16SE

Calibra

9286022 — **OE** 1612598

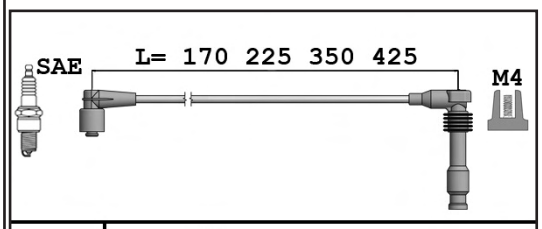

2.0i 16v. /4WD	C20XE X20XEV

Corsa B ...

9286004 — **OE** 1282133+1282134+1282135+1282141+1282152

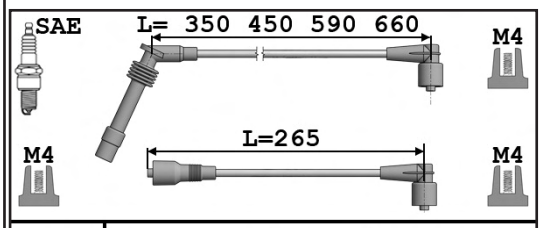

1.2i	08/95-	C12NZ
1.4i	08/95-	C14NZ

... Corsa B

9286002 — **OE** 1612608

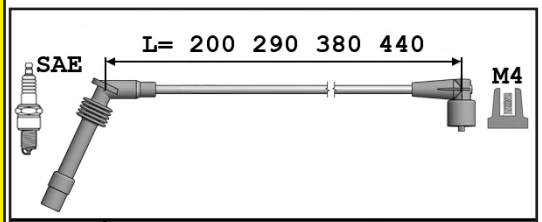

R
Class C

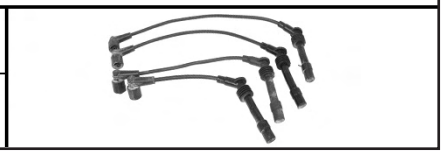

1.2i	X12SZ
1.4i	C14SE X14SZ

Omega B

9286022 — **OE** 1612598

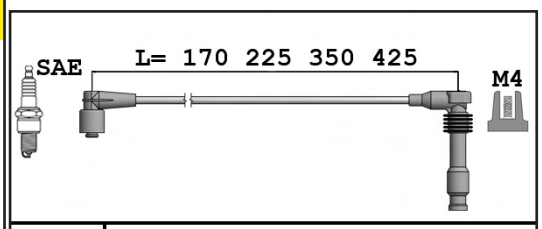

Class D

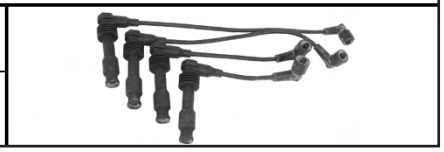

2.0i 16v. /GPL	-12/99	X20XEV

Sintra

9286022 — **OE** 1612598

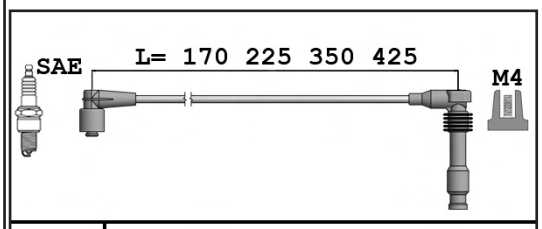

Class D

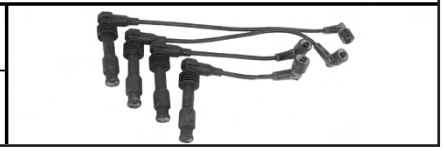

2.2i 16v. /GPL	X22XE

Vectra A ...

9286002 — **OE** 1612608

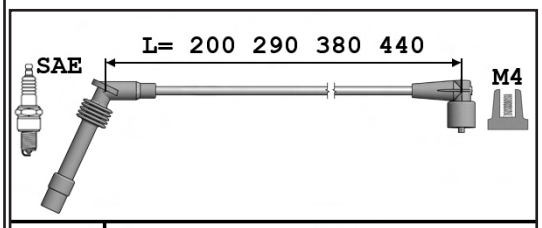

R
Class C

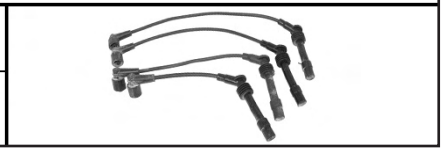

1.6i	X16SZ

... Vectra A

9286022 — **OE** 1612598

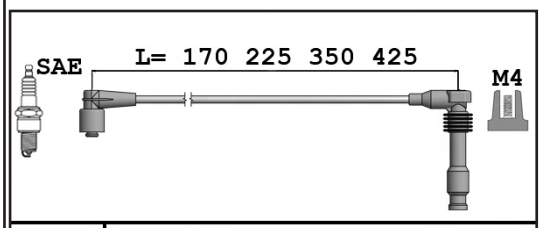

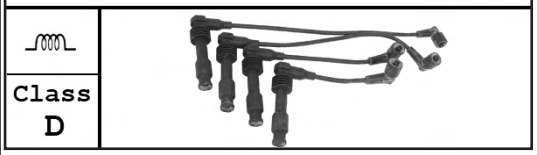

2.0i 16v. /4WD	02/90-	C20XE X20XEV

Vectra B

9286002 — **OE** 1612608

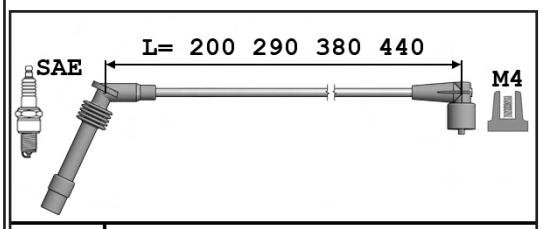

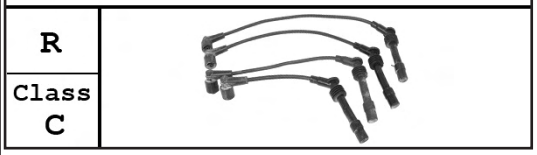

1.6i		X16SZR

9286022 — **OE** 1612598

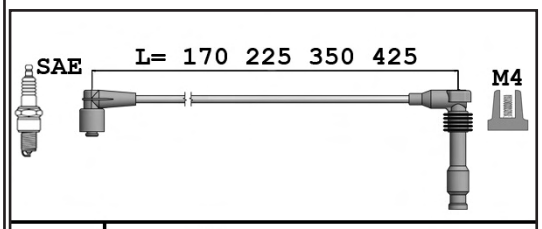

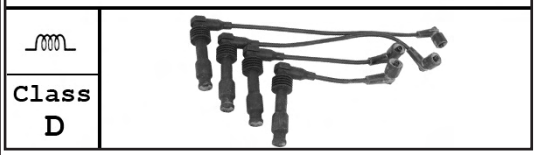

1.8i 16v. /GPL	-09/00	X18XE X18XE1
2.0i 16v. /GPL	-09/00	X20XEV

Combo -10/2018

9286002 — **OE** 1612608

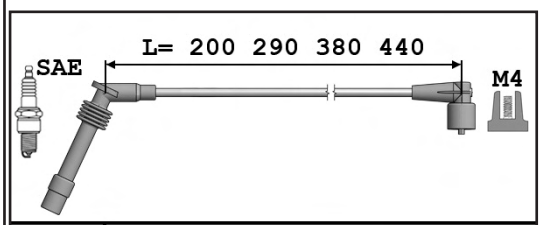

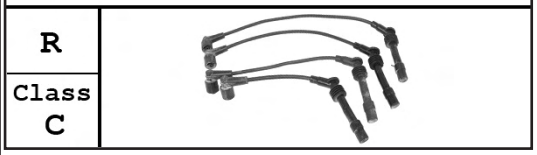

1.2i		X12SZ
1.4i		X14SZ

106

9280004 — OE 5967K6

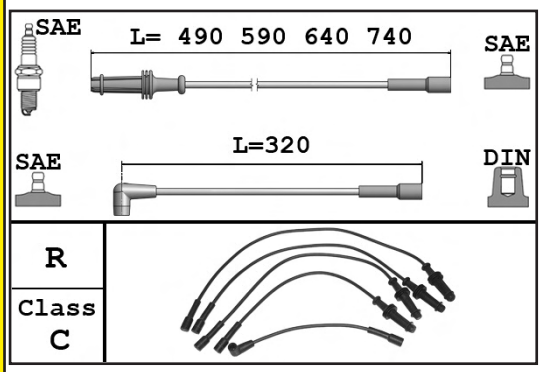

1.0 1.1 1.4	TU9 TU1 TU3.2

9280003 — OE 5967P1

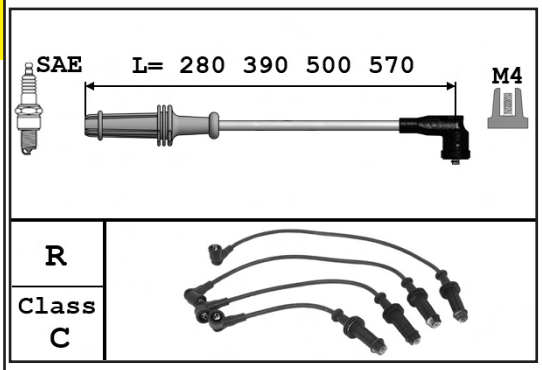

1.0i 1.1i 1.3i Rallye 1.4i 1.6i	TU9M TU1M/+ TU2J2 TU3J TU3JP TU3MC TU5J2 TU5JP

205 ...

9280004 — OE 5967K6

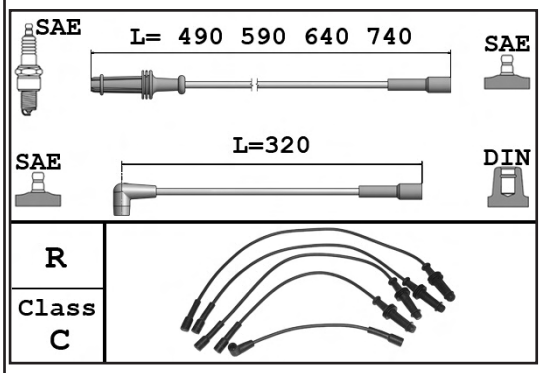

1.0 8v. 1.1 8v. 1.1i 8v. Système injection Bosch 1.3 Rallye 1.4 1.4i	TU9/TR TU1 -ch 24902800 TU1M TU24 TU3/A/CP/S/TR TU3M

9280003 — OE 5967P1

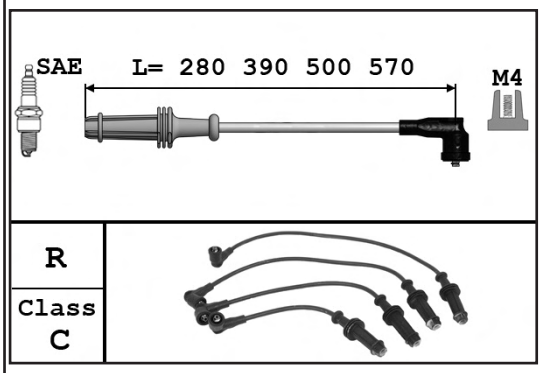

1.0i 8v. 01/91- 1.1i 8v. Système inj. Magneti Marelli 1.4i 01/91-	TU9M Ch- 24902801 TU1M TU3MC

... 205

9280005 — OE 5967K4

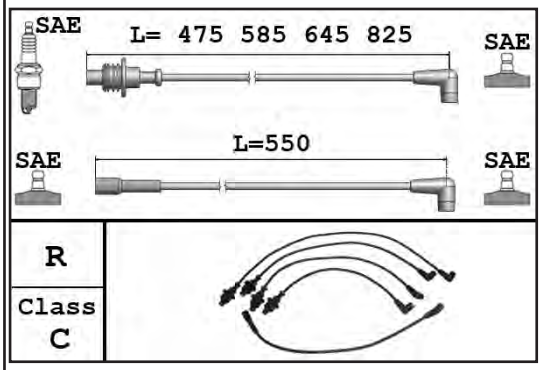

1.6	-02/01/90	XU51C
1.6	01/91-	XU

9280001 — OE 5967N7

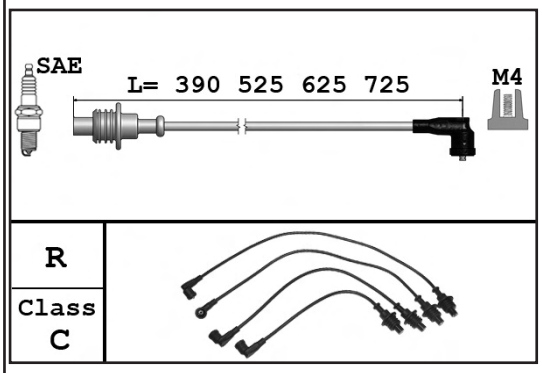

1.6i 8v.		XU5M

306 ...

9280003 — OE 5967P1

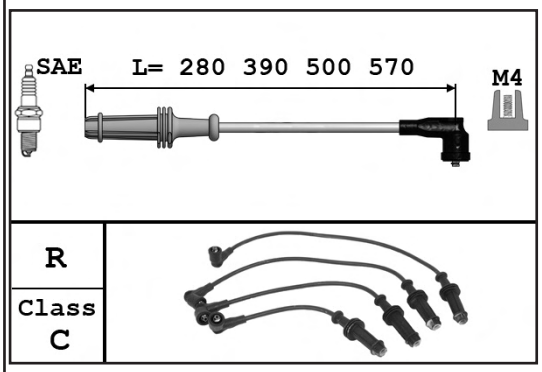

1.1i 8v.		TU1M/+
1.4i	-31/05/98	TU3JP TU3MC
1.6i	-31/05/98	TU5JP

9280004 — OE 5967K6

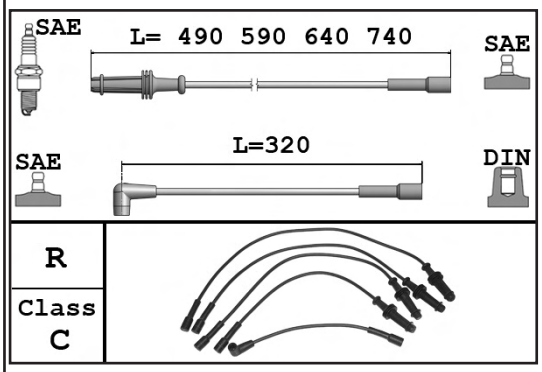

1.4		TU3 TU3.2

... 306

9280001 — OE 5967N7

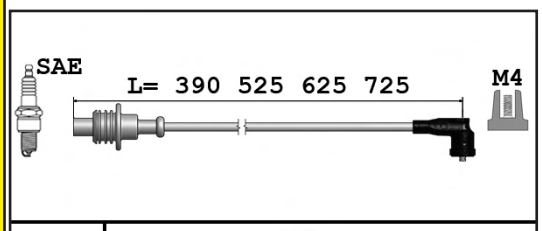

R
Class C

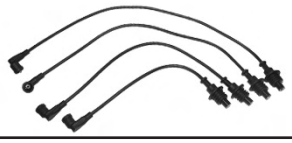

1.8i	XU7JP

9280002 — OE 5967N1

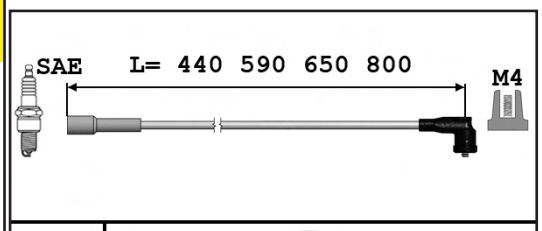

R
Class C

2.0i	XU10J2

309 ...

9280004 — OE 5967K6

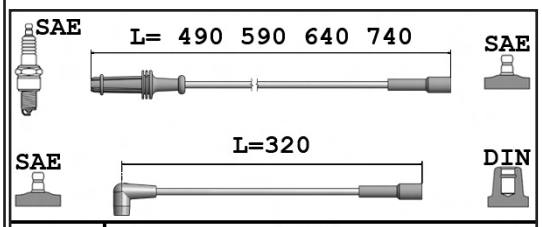

R
Class C

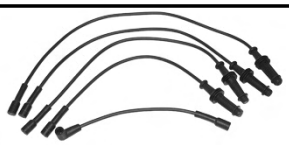

1.1/i 1.4/i	TU1/M/M+ TU3.2 TU3A/M/S/TR

9280005 — OE 5967K4

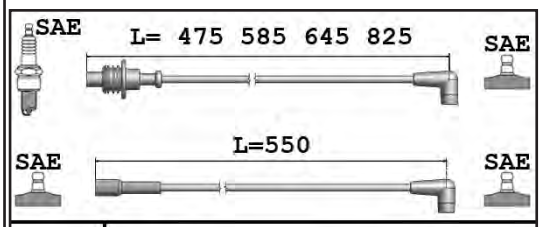

R
Class C

1.6 1.6i 1.9	-ch 10379257 01/12/89-	XU52C XU5M XU92C

... 309

9280001 — OE 5967N7

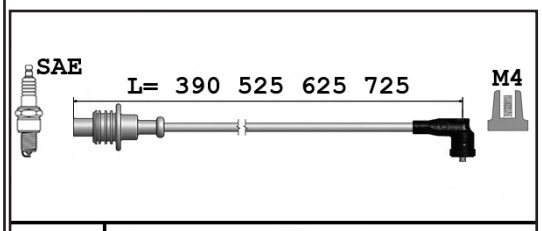

R
Class C

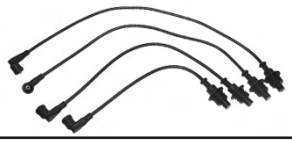

1.6i	Ch- 10379258	XU5M
1.9i		XU9M

405 ...

9280004 — OE 5967K6

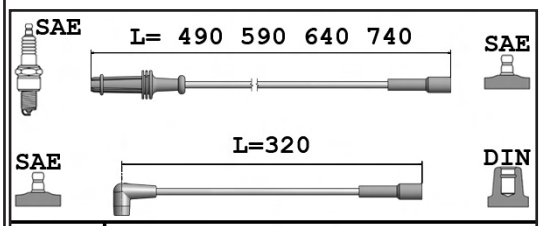

R
Class C

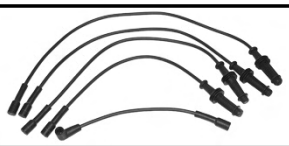

1.4		TU3 TU3.2 TU3A/TR

9280003 — OE 5967P1

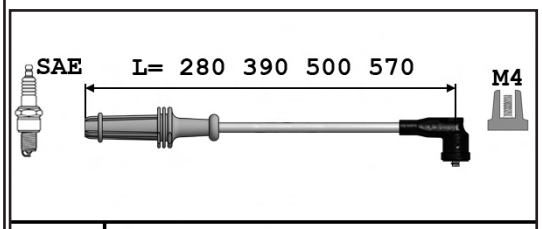

R
Class C

1.4i		TU3MC

9280001 — OE 5967N7

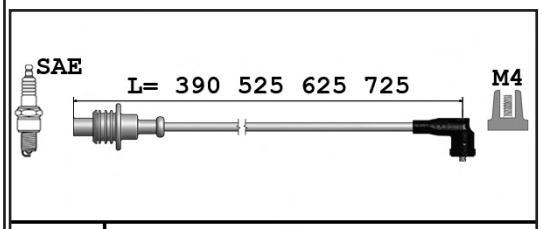

R
Class C

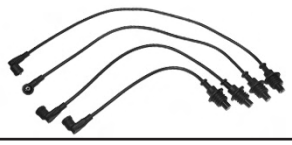

1.6i	Ch-70119981	XU5M
1.6i		XU5JP
1.8i		XU7JP

PEUGEOT

...405

9280005 — OE 5967K4

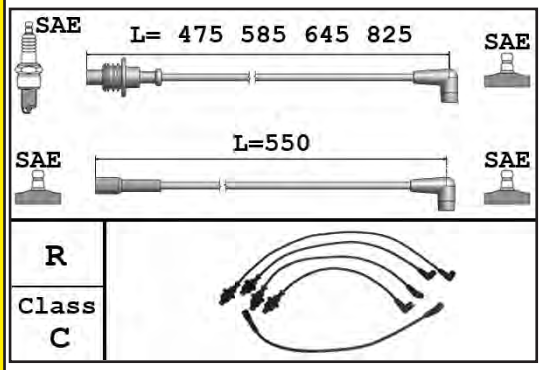

1.6 1.6 1.6i 1.9	06/92- -ch 70119980	XU52C XU5CP XU5M XU92C

9280002 — OE 5967N1

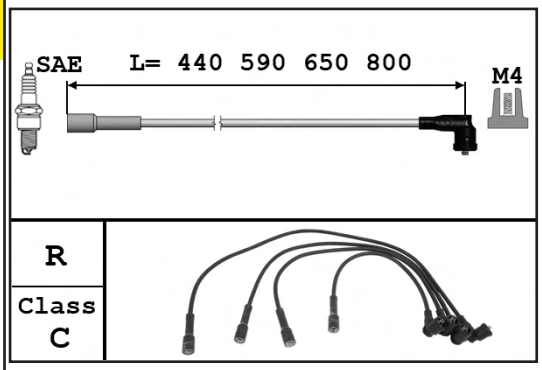

1.9i 2.0i	XU9J2 XU10J2

406

9280001 — OE 5967N7

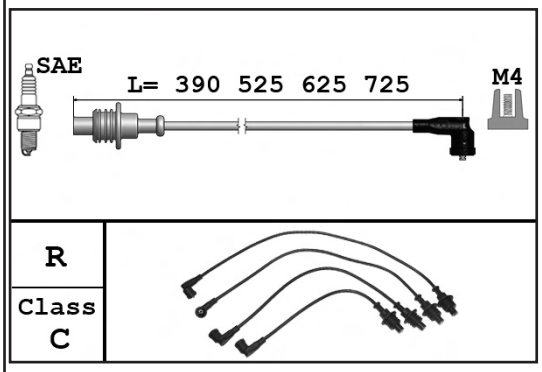

1.6i 1.8i 8v.	XU5JP XU7JB/JP

9280002 — OE 5967N1

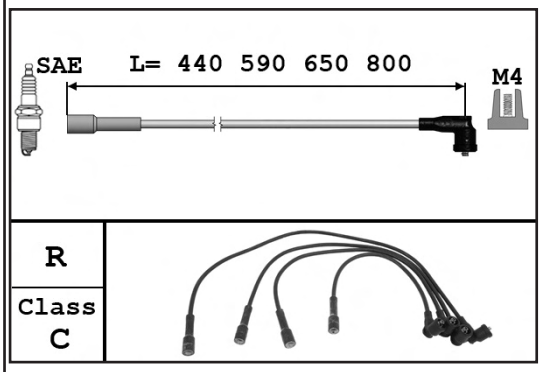

2.0i Turbo	XU10J2TE

605

9280002	OE 5967N1	
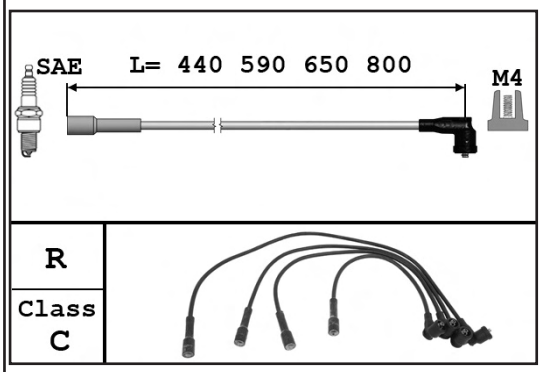	2.0i Turbo	XU10J2TE

806

9280001	OE 5967N7	
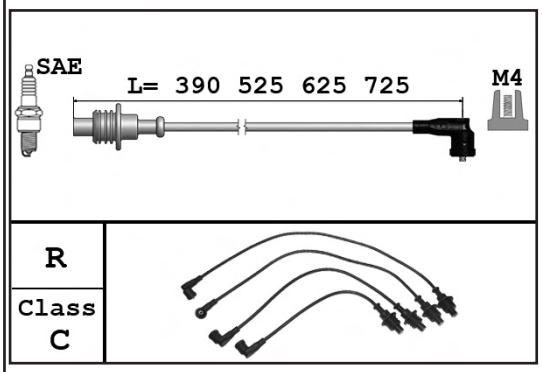	1.8i	XU7JP

9280002	OE 5967N1	
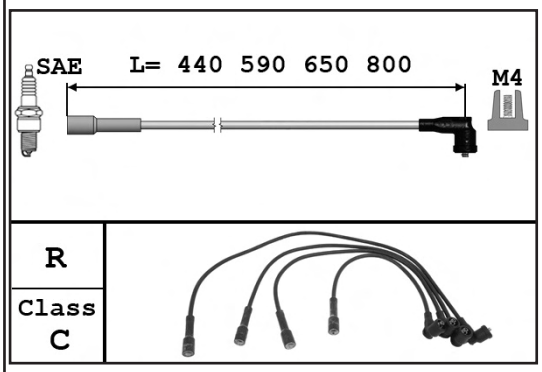	2.0i /Turbo	XU10J2/TE

Expert I II III VL -04/16

9280001	OE 5967N7	
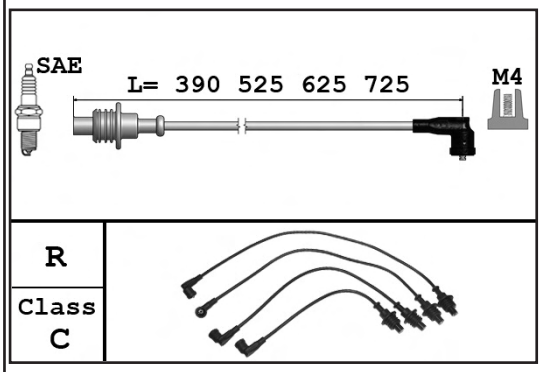	1.8i	XU7JP

PEUGEOT

Boxer I -01/02

9280001	OE 5967N7	
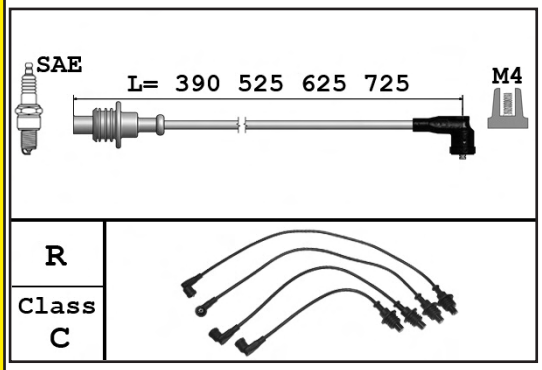	2.0i	XU10J2/U

Boxer II 01/02-07/06

9280001	OE 5967N7	
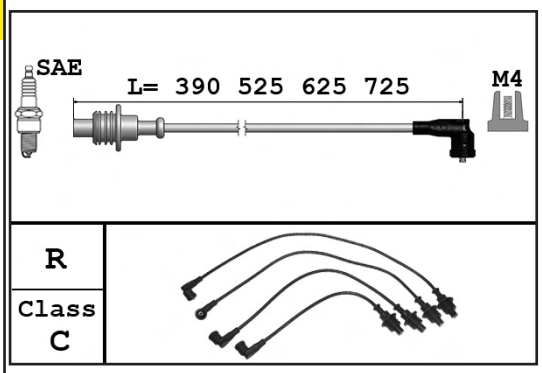	2.0i	XU10J2U

Expert I II III VU -04/16

9280001	OE 5967N7	
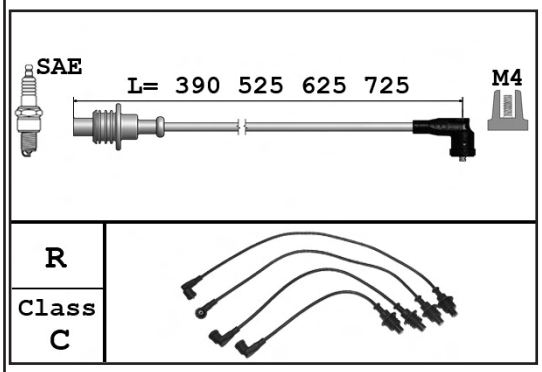	1.8i	XU7JP

Partner I II III VL/VU -05/18 ...

9280003	OE 5967P1	
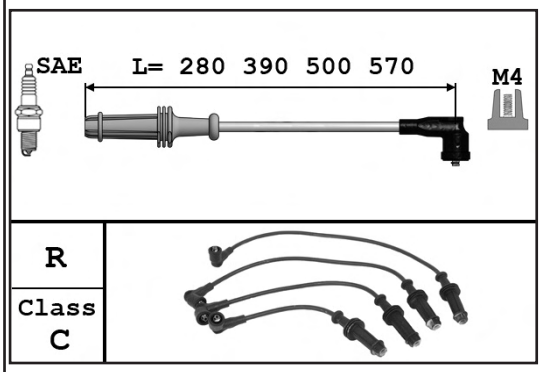	1.1i 8v. 1.4i	TU1M+ TU3JP

... Partner I II III VL/VU -05/18

PEUGEOT

9280004 — OE 5967K6

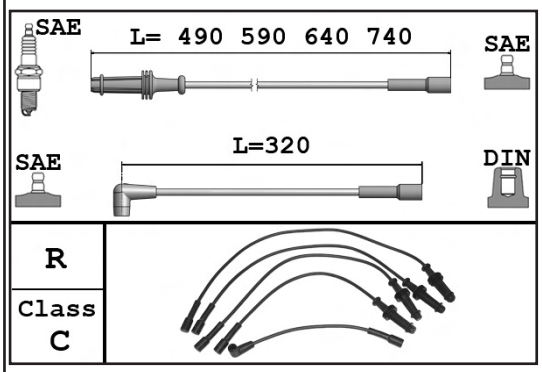

1.4i	TU3.2

9280001 — OE 5967N7

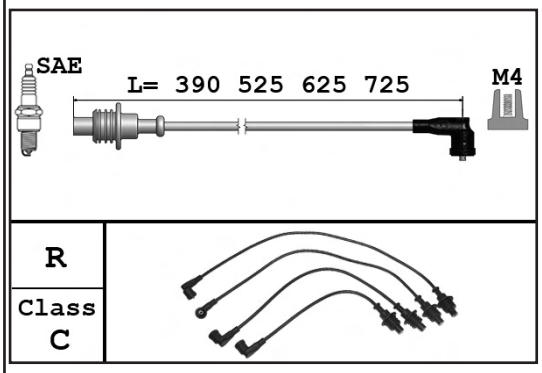

1.8i	XU7JB

RENAULT

R4

9284016 — OE -

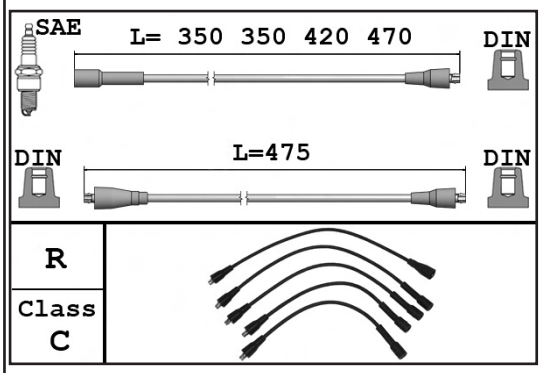

0.8 1.1	

Super 5 ...

9284017 — OE -

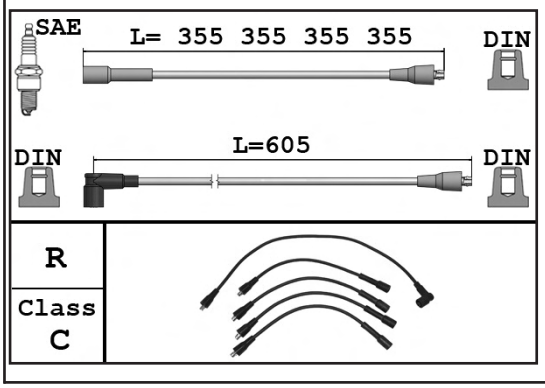

1.0 1.1	10/84-06/90 10/84-03/95

... Super 5

9284009 — **OE** 7700749521

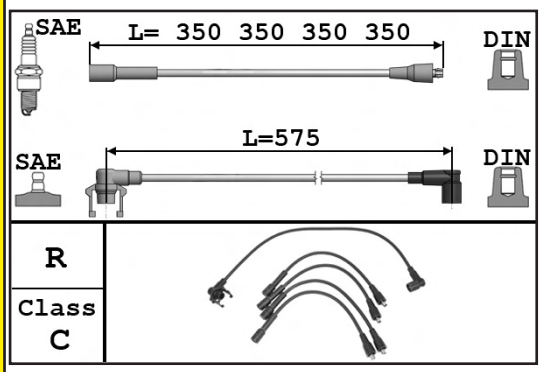

1.4

C1J768
C2J700/80/81/84/88/98
C3J700/02/60

R6

9284016 — **OE** -

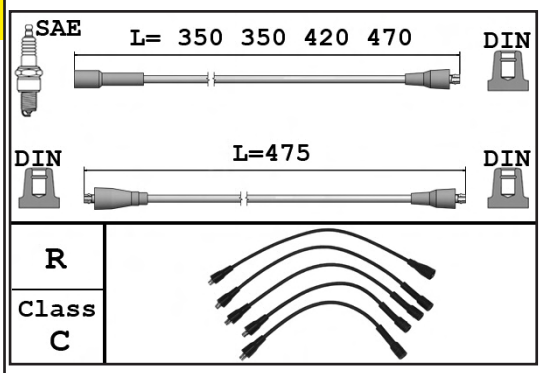

0.8i
1.1i

R8

9284016 — **OE** -

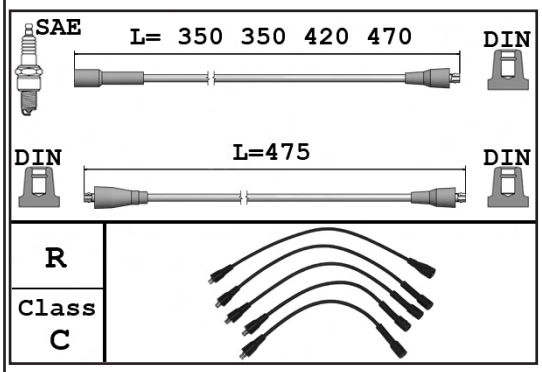

1.1

R9

9284017 — **OE** -

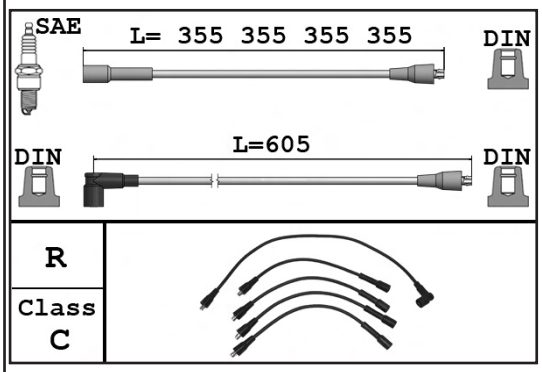

1.1	07/81-06/87
1.2	01/84-06/89
1.4 /Turbo	07/81-06/89

R11

9284017 — OE -

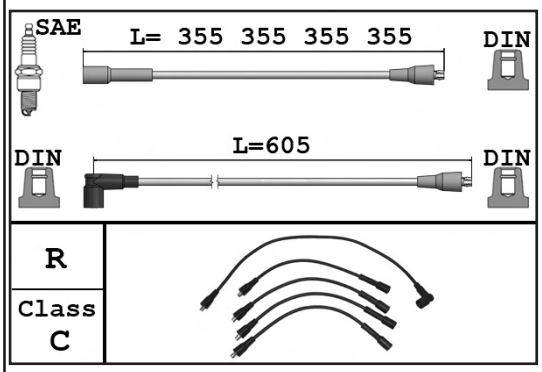

1.4	04/83-06/89	C2J717/18/55/57

R12

9284016 — OE -

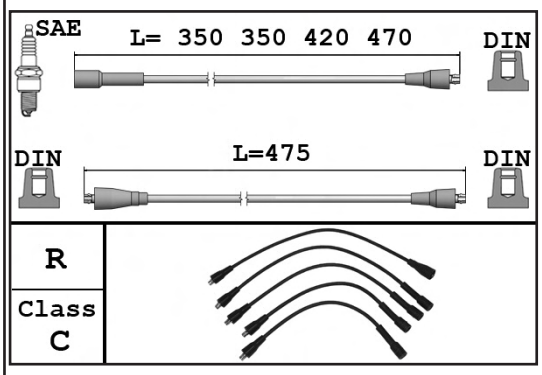

1.3		

R15

9284016 — OE -

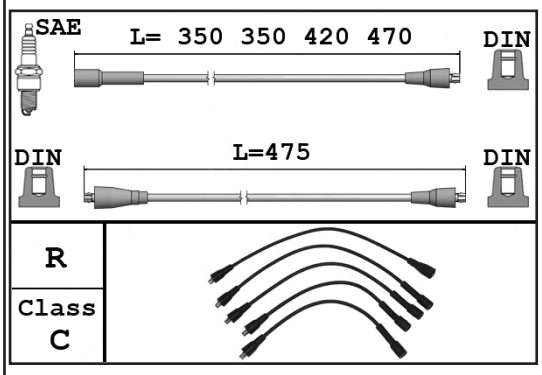

1.3		

R16

9284016 — OE -

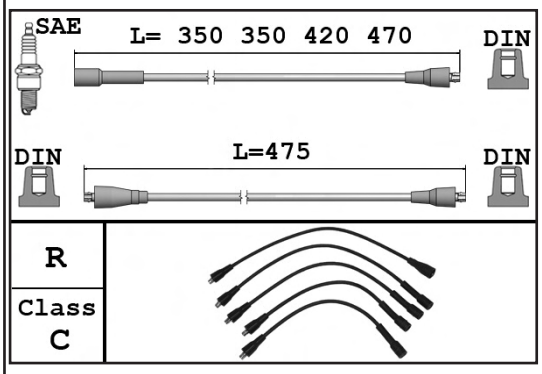

1.6		

R18

9284017		OE -
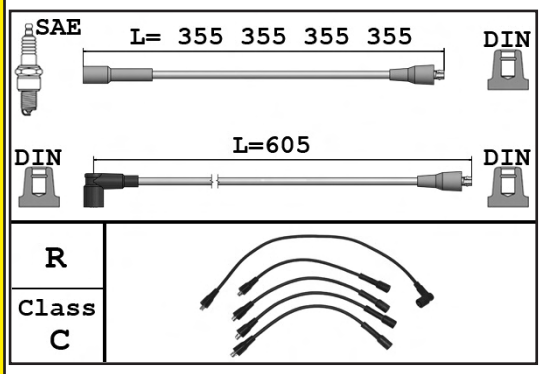	1.6	841717/25/26 A2M723

R19

9284010		OE 7700851994
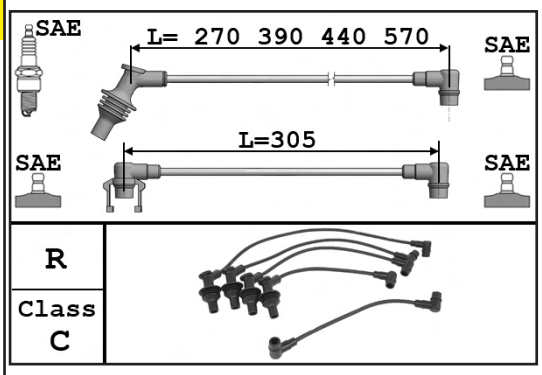	1.8i	F3P682 F3P700/04/05/06 F3P07/08/60/65

R19 Cabriolet

9284010		OE 7700851994
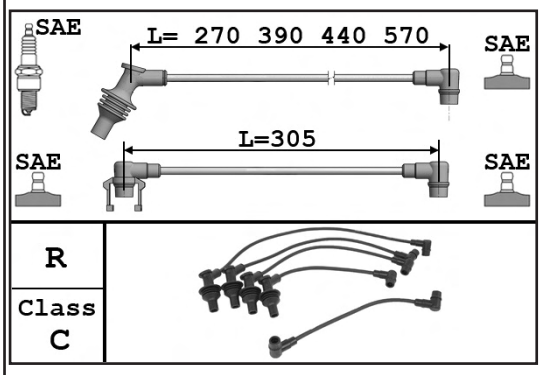	1.8i	F3P682 F3P704/05/06/07 F3P08/60/64/65

R19 Chamade

9284010		OE 7700851994
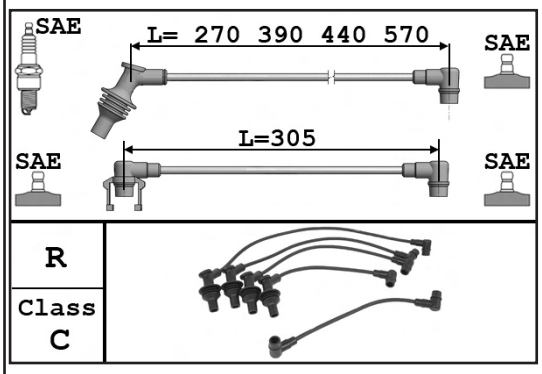	1.8i	F3P682 F3P700/04/05/06 F3P07/08/60/65

Clio I -02/98

9284009

OE 7700749521

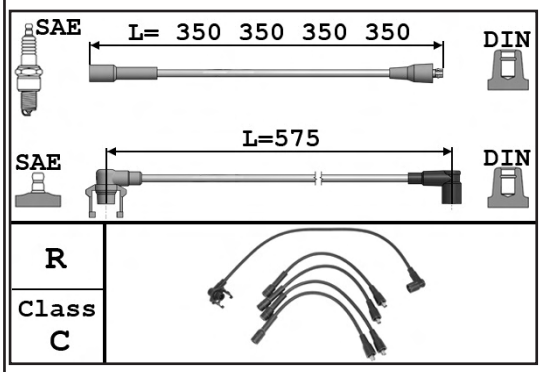

1.2i		C3G720

9284004

OE 7700107662

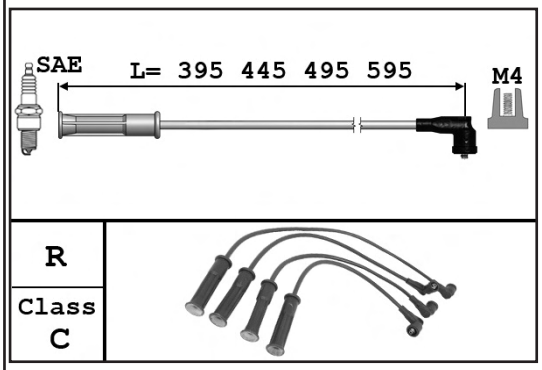

1.2i 8v.	357K/Y 657K	D7F730

9284007

OE 7700742835

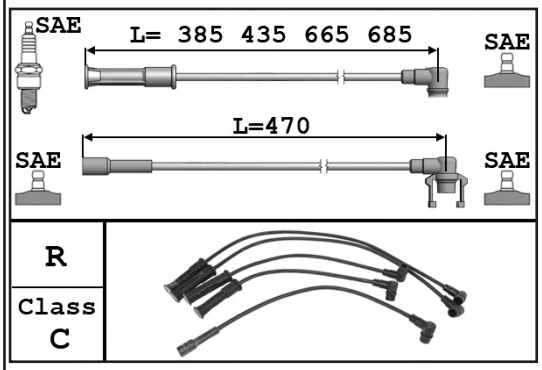

1.2i		C/S572	E5F710
1.2i	357F/7L	C/S57A	E7F700/04
1.2i		C/S57R	E7F706
1.2i	357G/7R	C/S57A	E7F708
1.2i	357J		E7F750
1.4		C573	E6J712/13
1.4i		C57B	E7J601 710/11/16
1.4i		C57T	E7J718/19
1.4i		C57Y	E7J754
1.4i		C57J	E7J756/57

9284010

OE 7700851994

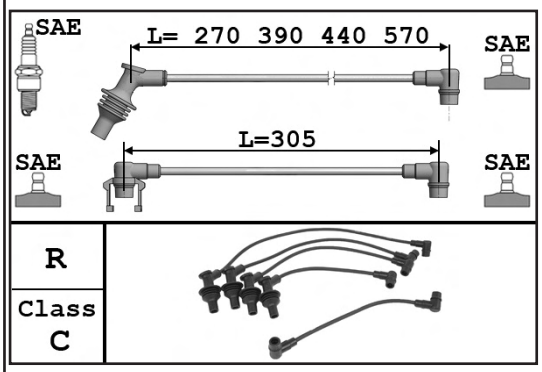

1.8i	-22/12/95	C57C	F3P710
1.8i		C57U	F3P714
1.8i	-22/12/95	357A/7D/7U/78	F3P755
1.8i	-22/12/95	357E/7V C57H	F3P758
1.8i /RSi	-22/12/95	357U	F3P754
1.8i RSi		C529	F3P712

Clio II 03/98-

9284012

OE 224404659R

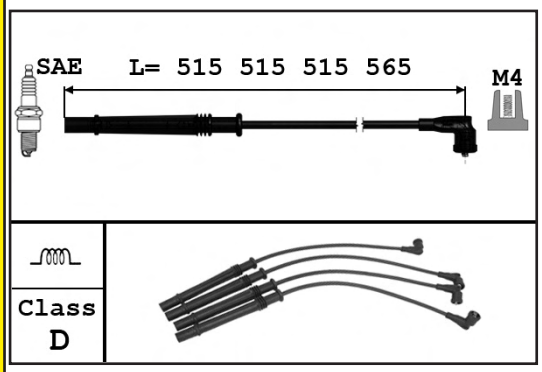

1.0i 16v.	BB2R/3B/3V/3W CB2R/3B/3V/3W LB2R/3B	D4D706/52
1.2i 16v.	BB27/2L/2M/2T/2U/2V BB30/31/33 CB27/2L/2M/2T/2U/2V LB27/2U/2V	D4F722/28

9284011

OE 8200805133

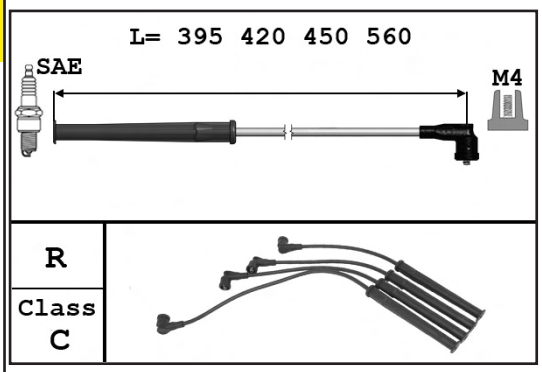

1.0i		BB/CB0Y/2Y	D7D760
1.2i 8v.	02/10/99-	BB/CB/SB0A	D7F720/22
1.2i 8v.	10/01/00-	BB0F CB0F	D7F726
1.2i 8v.		BB/CB10/1K BB/CB2D/2M SB0F/10 SB2D/2M	D7F726
1.2i 8v.		BB0F CB0F	D7F744
1.2i 8v.		BB0F/10/1K CB0F/10/1K SB0F/10	D7F746
1.2i 8v.		BB/CB0F/1K SB1K	D7F764/66

9284004

OE 7700107662

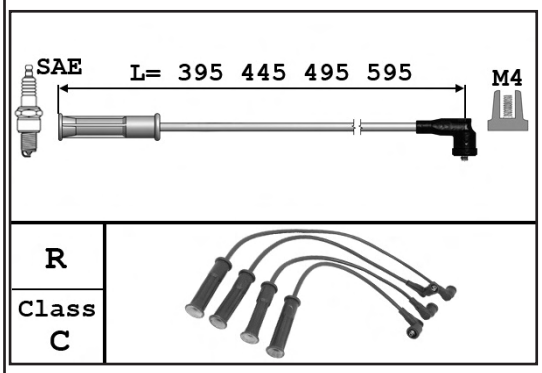

1.2i 8v. /GPL	-02/10/99	BB/CB/SB0A	D7F720/22
1.2i 8v.	-10/01/00	BB/CB0F	

9284006

OE 7700273226

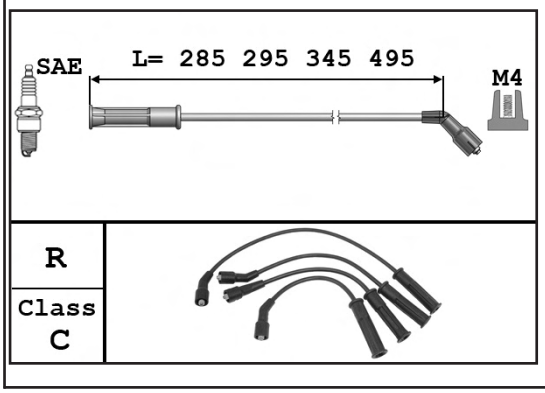

1.4i 8v.	BB/CB0C	E7J780
1.6i	BB/CB0D	K7M744/45

Clio II 03/98-

9284005 — OE 224404252R

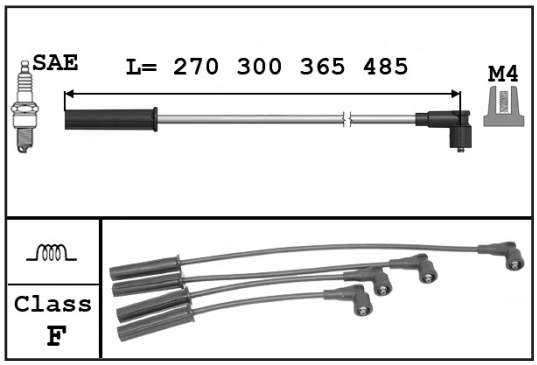

1.4i 8v.	K7J700/10
1.6i	K7M746

9284013 — OE 8200334440

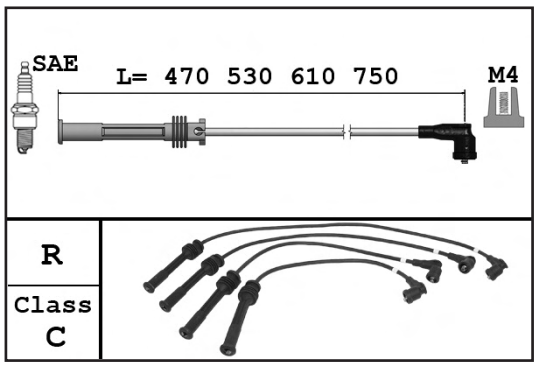

2.0i 16v. RS

Clio III 09/05-

9284012 — OE 224404659R

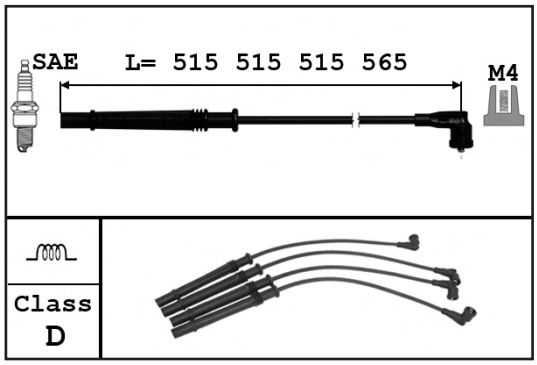

1.2i 16v.	BR02/0J/0R/0S BR11/19/1D/1L/23 CR02/0J/0R/0S CR11/23 KR02/0J/0S SR0J/0S/23	D4F740/44
1.2i 16v.	BR1U/21 CR1U/21 KR1U/21 SR1U/21	D4F742
1.2i 16v.	BR01/03/0E CR/KR0E	D4F764

Clio IV 09/12-

9284012 — OE 224404659R

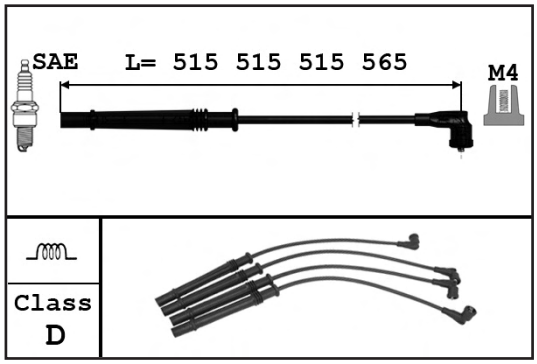

1.2i 16v.	BHMG/MK/MG	D4F740/44

Espace JE

9284003

OE 7700874564

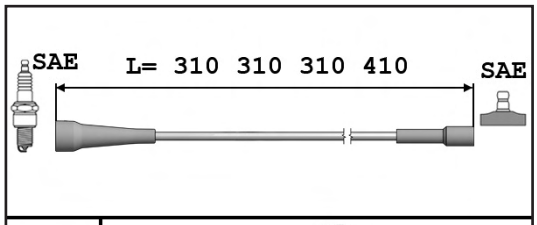

R
Class C

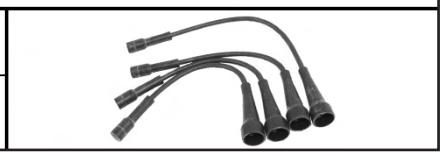

2.0i 8v.	-01/04/97	JE0A	F3R728/29/68/69

9284001

OE 7700106221

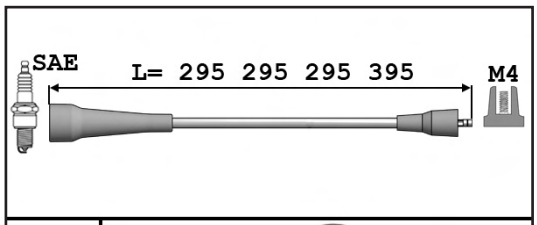

R
Class C

2.0i 8v.	02/04/97-	JE0A	F3R728/29/68/69

Kangoo I -02/03 VL ...

9284011

OE 8200805133

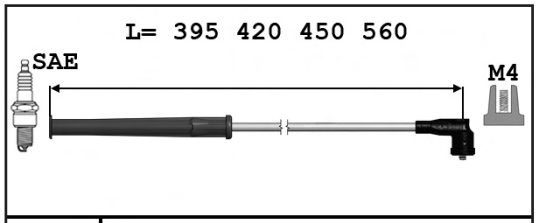

R
Class C

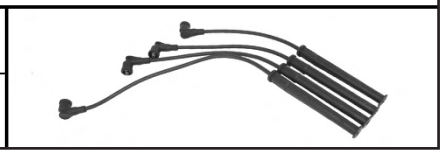

1.0i	02/10/99-	FC0Y	D7D700
1.2i		FC0A	D7F720/22
1.2i		FC01/0F	D7F726/44/46
1.2i		FC1A/1H	D7F764/66

9284012

OE 224404659R

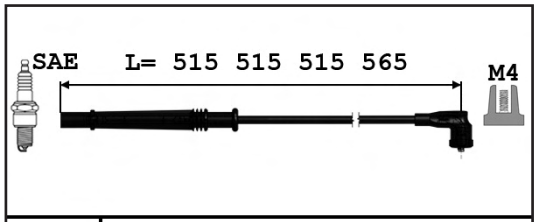

Class D

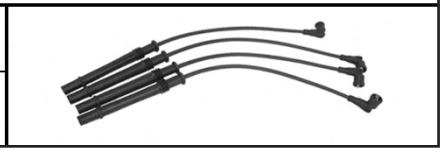

1.2i 16v.	FC1D/1K/1P	D4F730

... Kangoo I -02/03 VL

9284004 — OE 7700107662

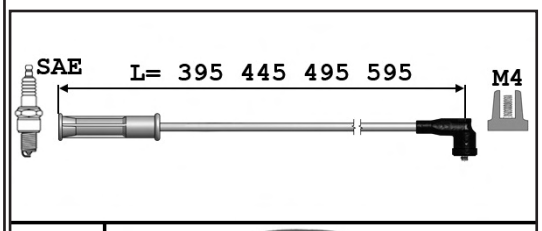

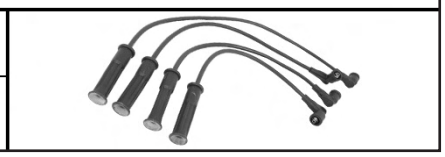

R
Class C

1.2i 8v. /GPL		KC0A	D7F710
1.2i 8v. /GPL	-02/10/99	KC0A	D7F720/22

9284006 — OE 7700273226

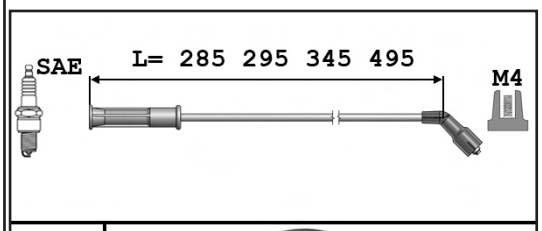

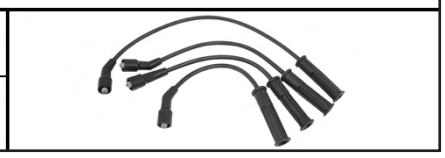

R
Class C

1.4i		KC0C	E7J780

9284005 — OE 224404252R

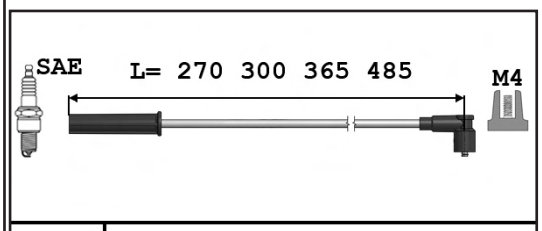

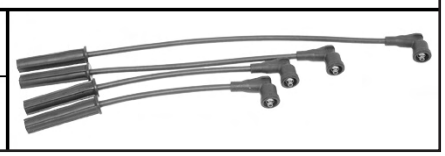

Class F

1.4i			K7J700/01
1.6i			K7M746

Kangoo I 03/03-12/07 VL ...

9284011 — OE 8200805133

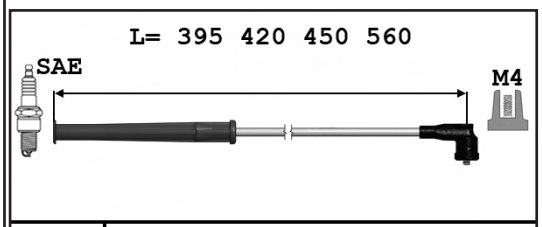

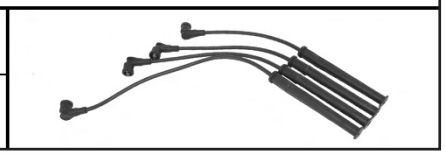

R
Class C

1.0i		FC0Y	D7D700
1.2i		FC0A	D7F720/22
1.2i		FC01/0F	D7F726/44/46
1.2i		FC1A/1H	D7F764/66

... Kangoo I 03/03-12/07 VL

9284012 — OE 224404659R

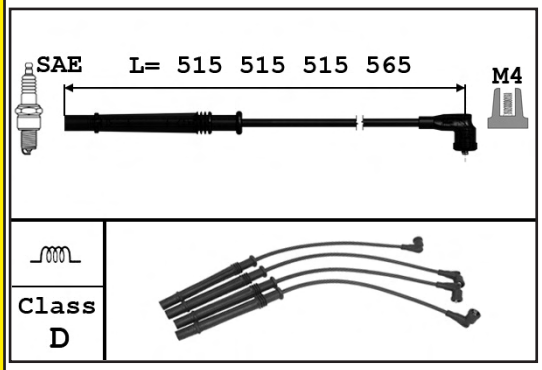

1.2i 16v.	FC1D/1K/1P	D4F730

9284005 — OE 224404252R

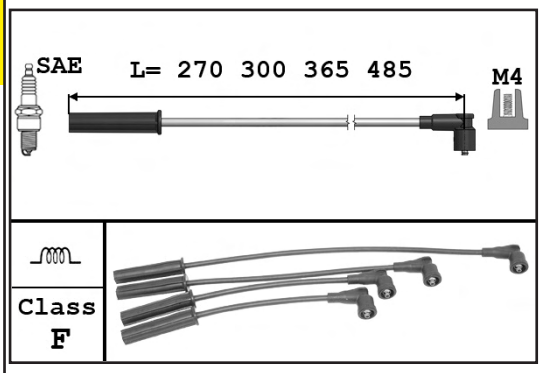

1.4i	K7J700/01

Kangoo II 01/08- VL

9284005 — OE 224404252R

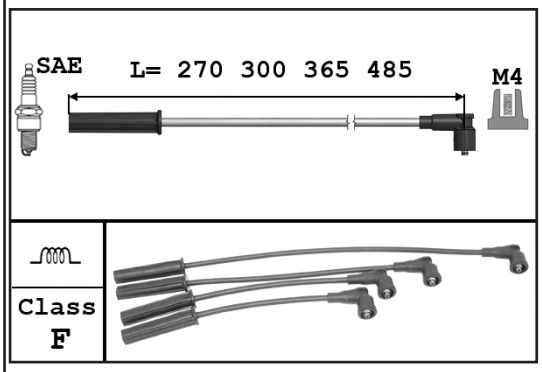

1.6i	K7M750

Laguna I ...

9284003 — OE 7700874564

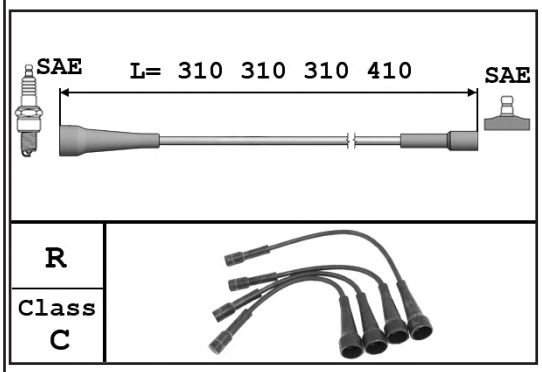

1.8i	-01/04/97	B560/6T	F3P670/74
2.0i	-01/04/97	B56L/6N	F3R728/29/68/69

... Laguna I

9284015 — OE 7431275284

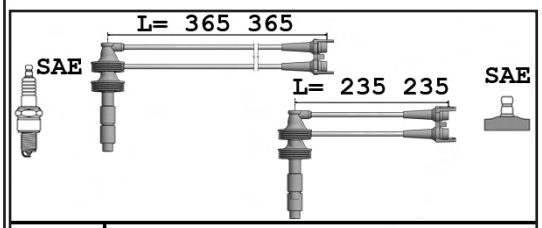

R
Class C

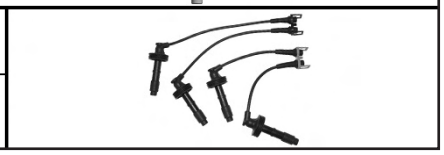

2.0i 16v.			N7Q700/04

9284001 — OE 7700106221

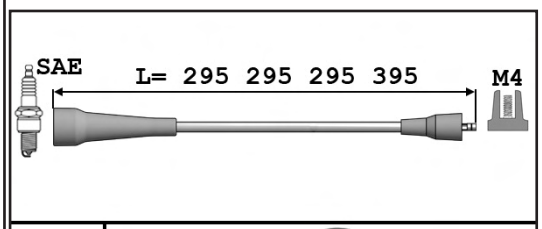

R
Class C

1.8i	02/04/97-	B560/6T	F3P670/74
1.8i GPL	02/04/97-	B560	F3P676
2.0i		B56L	F3R611
2.0i	02/04/97-	B56L/6N	F3R728/29/68/69

9284010 — OE 7700851994

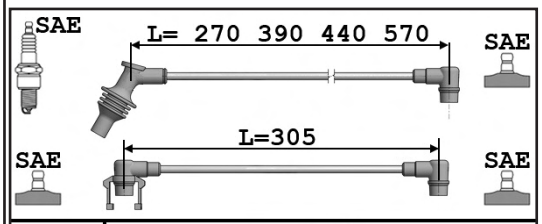

R
Class C

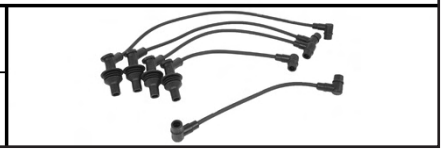

1.8i	-02/05/95	B56S	F3P678
1.8i		B56B	F3P720
1.8i	-02/05/95	B56A/6Z	F3P724
2.0i	-02/05/95	B56C/6H	F3R722/23

Laguna I Nevada ...

9284001 — OE 7700106221

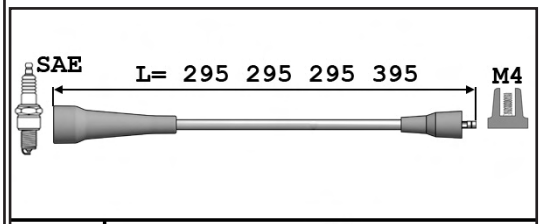

R
Class C

1.8i	02/04/97-	K560/6T	F3P670/74
1.8i GPL	02/04/97-	K560	F3P676
2.0i		K56L	F3R611
2.0i	02/04/97-	K56L/6N	F3R728/29
2.0i	02/04/97-	K56L	F3R768/69

RENAULT

... Laguna I Nevada

9284015

OE 7431275284

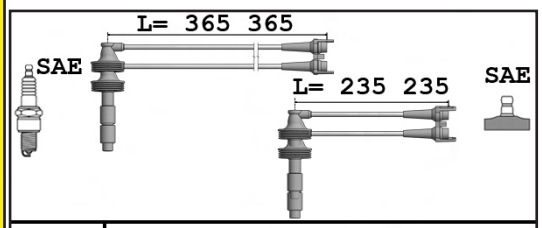

R
Class C

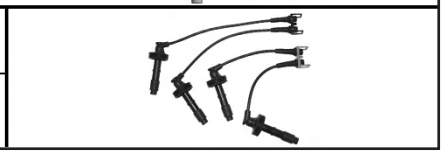

2.0i 16v.			N7Q700/04

9284003

OE 7700874564

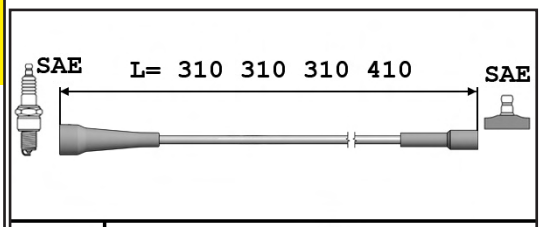

R
Class C

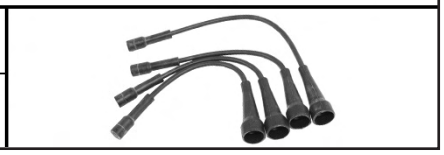

1.8i	-01/04/97	K560/6T	F3P670/74
2.0i	-01/04/97	K56L/6N	F3R728/29
2.0i	-01/04/97	K56L	F3R768/69

Megane I ...

9284007

OE 7700742835

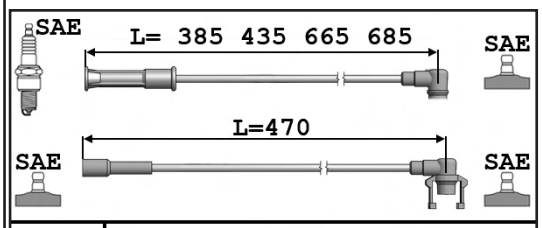

R
Class C

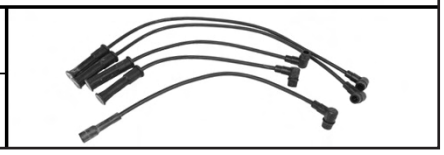

1.4i		BA0T	E7J624
1.4i		BA0E	E7J764

9284002

OE 7700866923

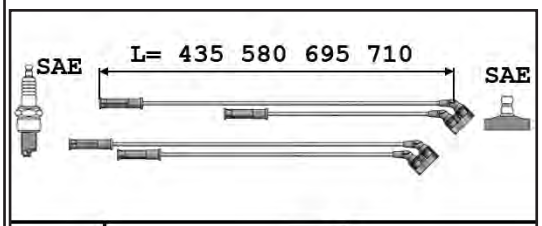

R
Class C

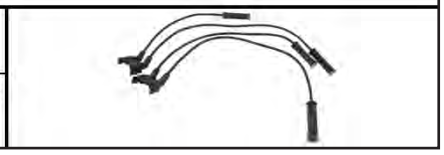

1.6i /GPL	-10/03/97	BA0F/0L/0S	K7M702/03/20/90

... Megane I

9284005 — OE 224404252R

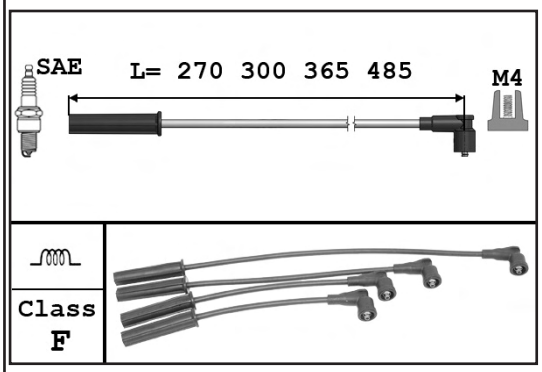

1.6i	10/03/97-	K7M702/03/04/20

9284003 — OE 7700874564

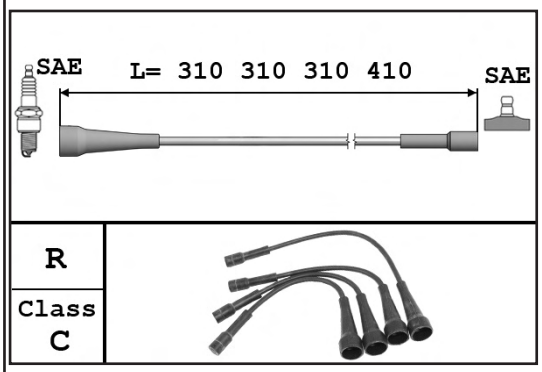

2.0i	-01/04/97	BA07/0G	F3R750/51/91/96/97/98

9284001 — OE 7700106221

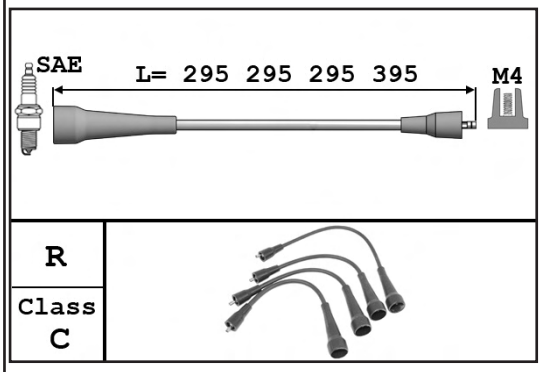

2.0i	02/04/97-	BA07/0G	F3R750/51/91/96/97/98

Megane I Break ...

9284007 — OE 7700742835

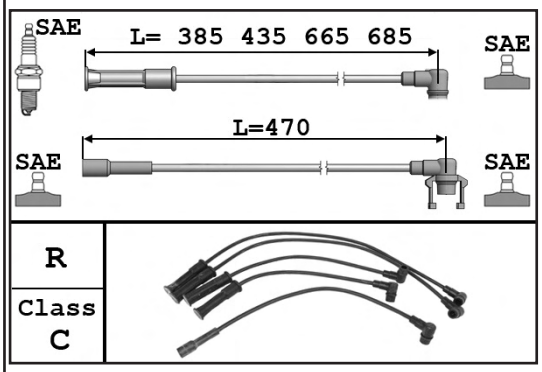

1.4i	KA0V	E7J626

... Megane I Break

9284005 — **OE** 224404252R

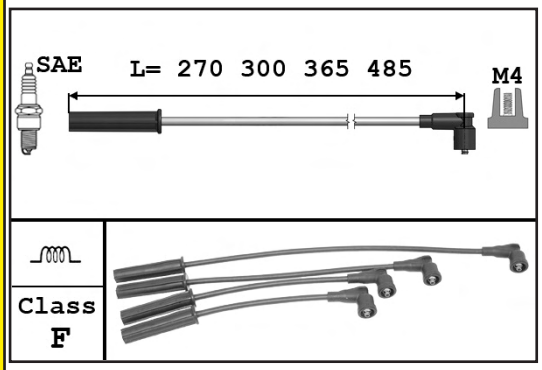

1.6i	K7M702

Megane I Cabriolet

9284002 — **OE** 7700866923

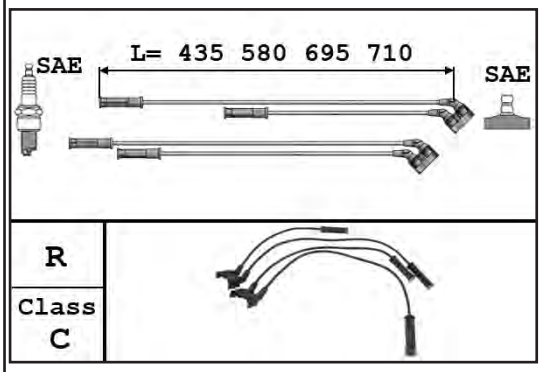

1.6i	-10/03/97	EA0F	K7M702

9284005 — **OE** 224404252R

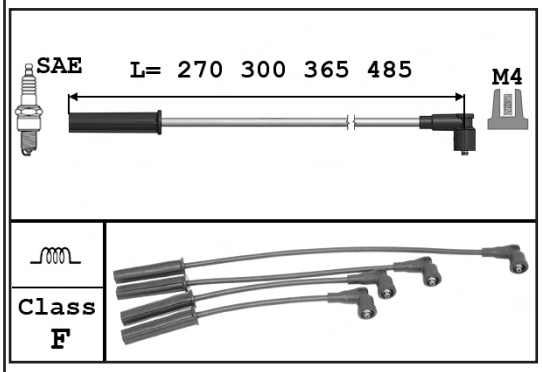

1.6i	10/03/97-	K7M702

9284001 — **OE** 7700106221

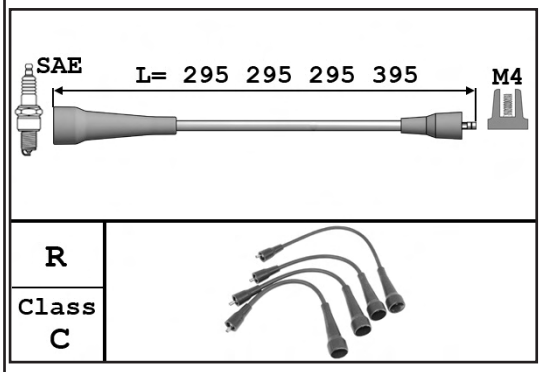

2.0i	02/04/97-	EA0G	F3R791/96

Megane I Classic ...

RENAULT

9284007

OE 7700742835

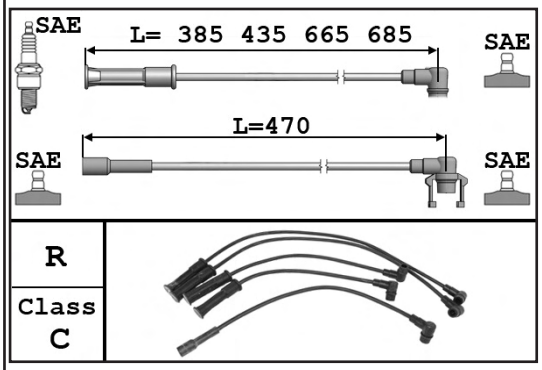

1.4i	LA0E	E7J764

9284002

OE 7700866923

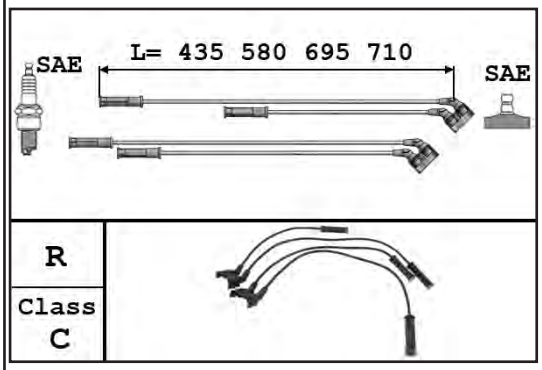

1.6i	-10/03/97	LA0F/0L/0S	K7M702/03/20/90

9284005

OE 224404252R

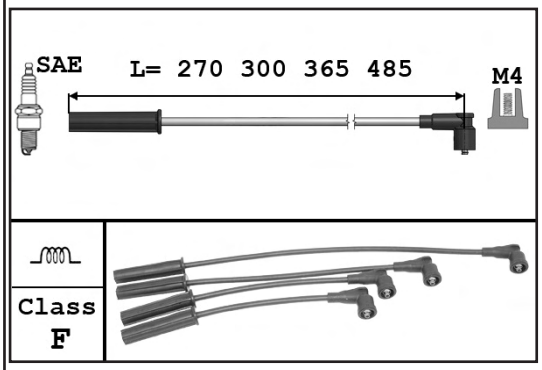

1.6i	10/03/97-	K7M702/03/04/20

9284003

OE 7700874564

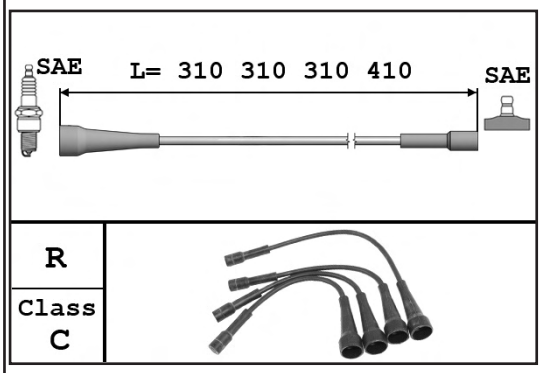

2.0i	-01/04/97	LA07/0G	F3R750/51/91/96/97/98

... Megane I Classic

9284001 — OE 7700106221

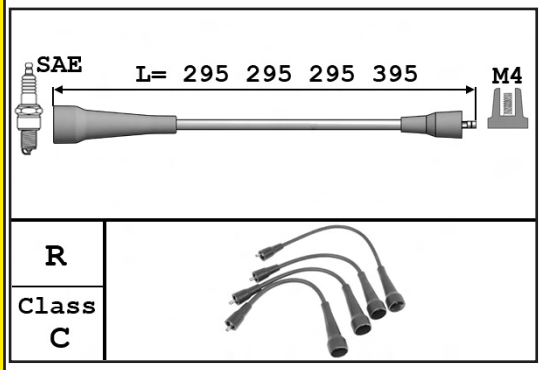

2.0i	02/04/97- LA07/0G	F3R750/51/91/96/97/98

Megane I Coupé ...

9284002 — OE 7700866923

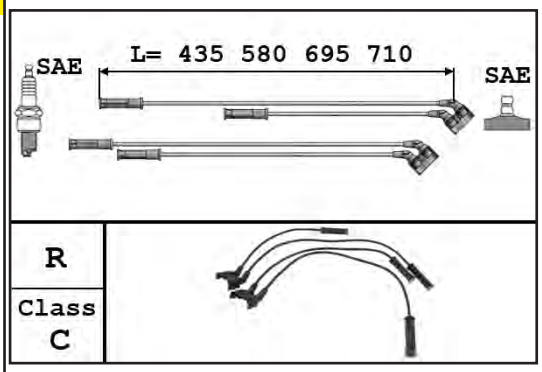

1.6i	-10/03/97 DA0F	K7M702/03

9284005 — OE 224404252R

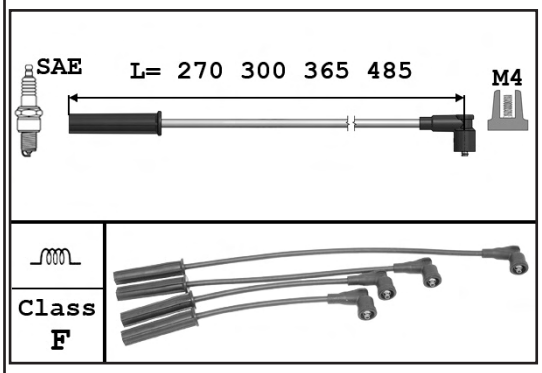

1.6i	10/03/97-	K7M702/03

9284003 — OE 7700874564

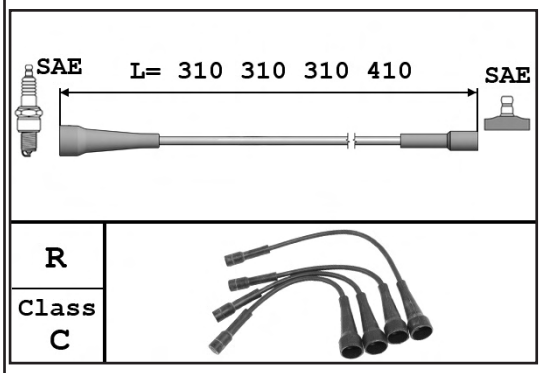

2.0i	-01/04/97 DA0G	F3R750/51/91/96/97/98

... Megane I Coupé

9284001 — **OE** 7700106221

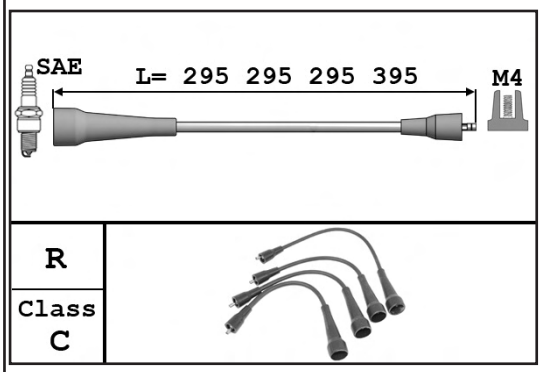

2.0i	02/04/97-	DA0G	F3R750/51/91/96/97/98

Modus

9284012 — **OE** 224404659R

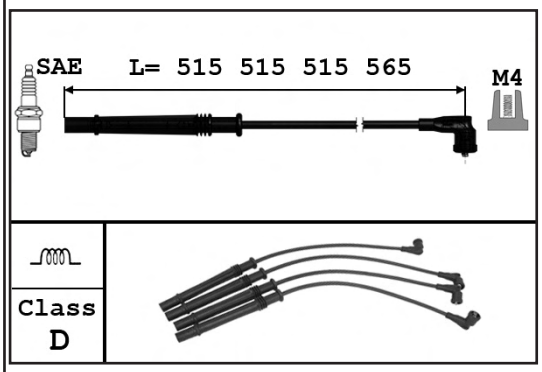

1.2i 16v.	FP0C/0K/0P JP0C/0K/0P/0R/0T	D4F740
1.2i 16v.	JP1C	D4F742
1.2i 16v.	JP0S	D4F764

Safrane

9284015 — **OE** 7431275284

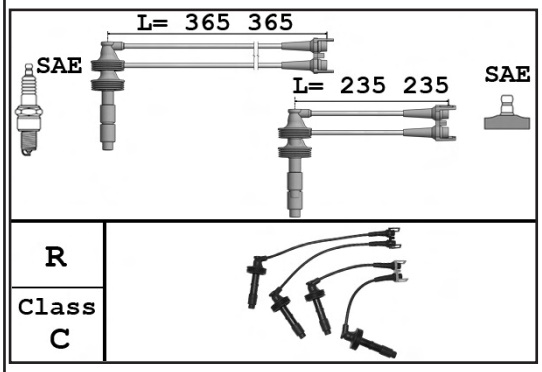

2.0i 16v.	N7Q710/11

9286035 — **OE** 7431335874+7439135700

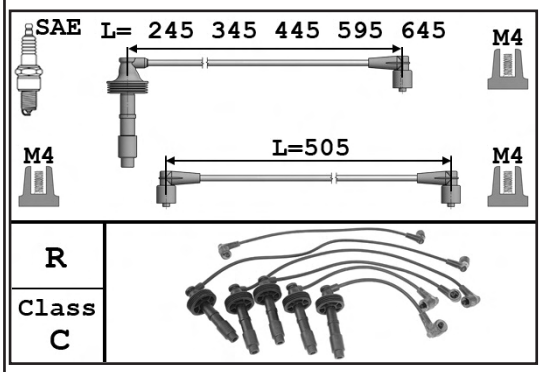

2.5i 20v.	N7U700/01

Scenic I -04/03

9284002

OE 7700866923

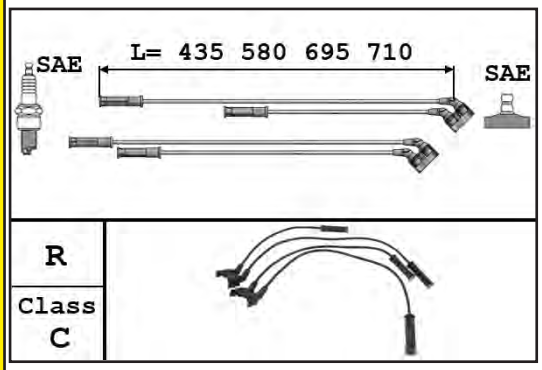

1.6i /GPL	-10/03/97	JA0F/0L	K7M702/03/20

9284005

OE 224404252R

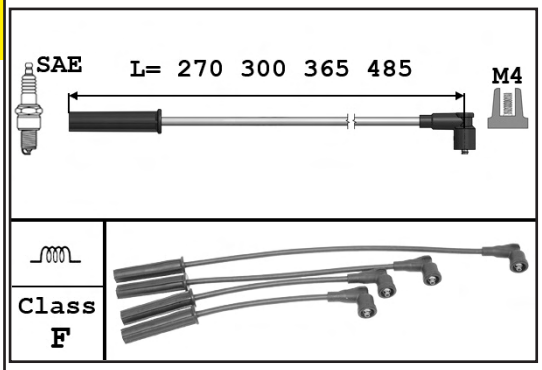

1.6i	10/03/97-	K7M702/03/20

9284001

OE 7700106221

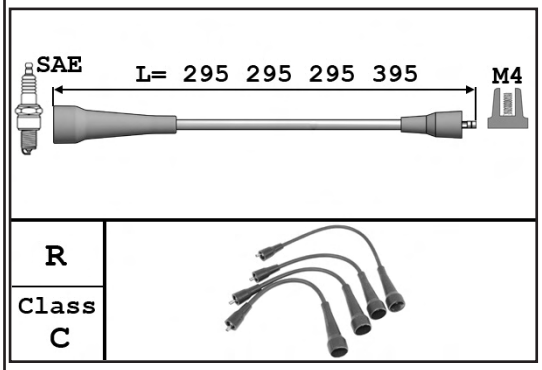

2.0i	-01/04/97	JA0G	F3R750/96/98
2.0i	02/04/97-	JA0G	F3R750/51/91/96/97/98

Thalia Symbol II (LU)

9284012

OE 224404659R

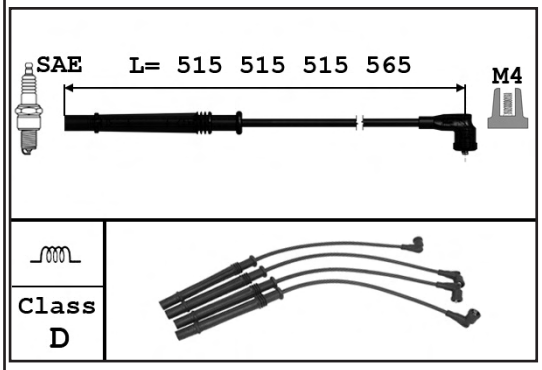

1.2i 16v.	LU2U/2V/2W/30	D4F728

Twingo I

9284011

OE 8200805133

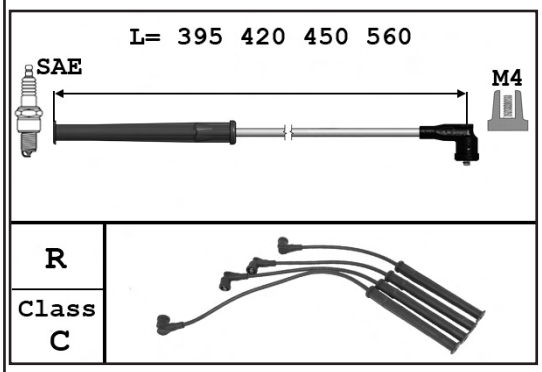

1.0i		C06Y	D7D740
1.2i 8v.	08/10/99-	C066/67 S066	D7F700/01/06
1.2i 8v.	13/12/99-	C068/6G S068/6G	D7F702
1.2i 8v.		C066/68 S068	D7F703/04
1.2i 8v.		C06G S06G	D7F708

9284009

OE 7700749521

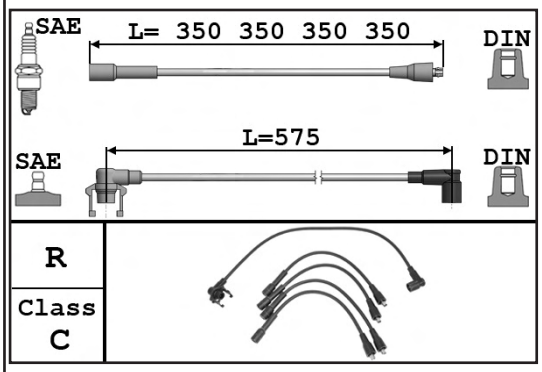

1.2i	C3G700/02

9284004

OE 7700107662

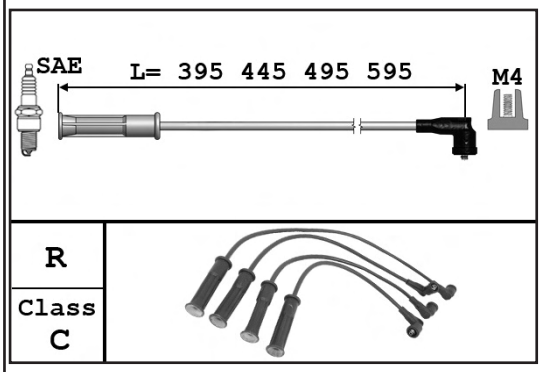

1.2i 8v.	-08/10/99	C066/67 S066	D7F700/01/06
1.2i 8v.	-13/12/99	C068/6G S068/6G	D7F702

9284012

OE 224404659R

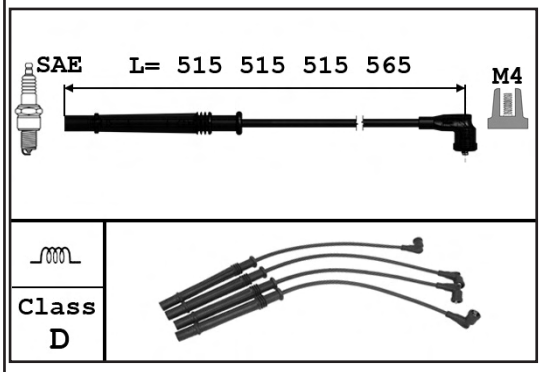

1.2i 16v.	C060/61/62/6V/6W	D4F708

RENAULT

Twingo II

9284012

OE 224404659R

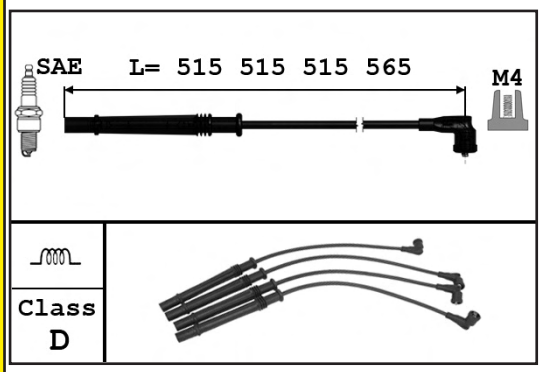

1.2i 16v.	CN01/06 GN01	D4F770
1.2i 16v.	CN04/05/0A/0B/0K/0V	D4F772

9284011

OE 8200805133

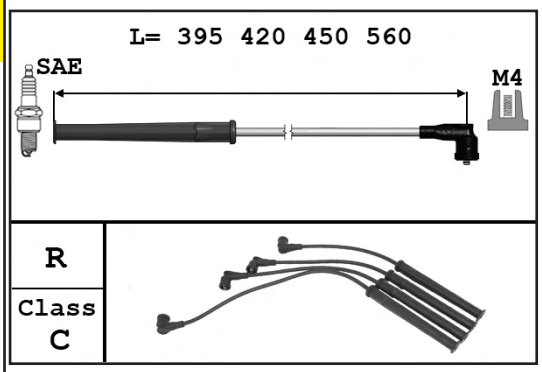

1.2i 8v.	CN/GN0D	D7F800

Estafette

9284017

OE -

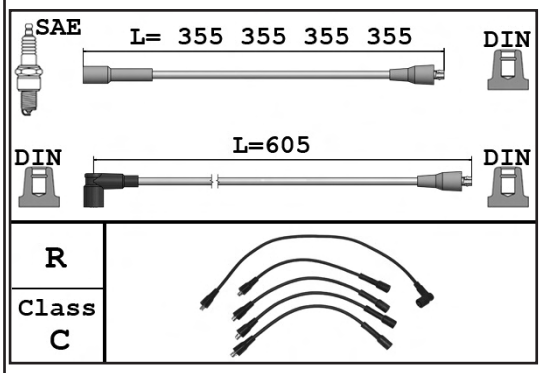

1.3i	08/69-12/81

Express ...

9284009

OE 7700749521

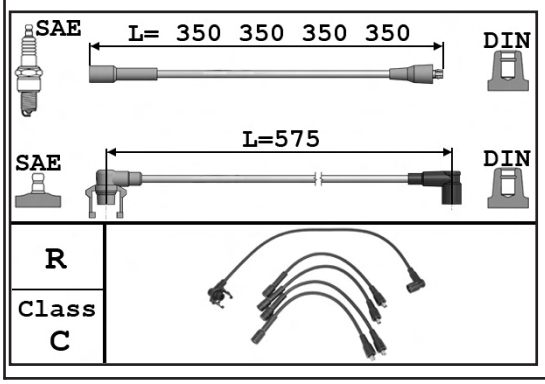

1.2i	C3G710
1.4	C1J768/80 C2J784
1.4i	C3J700/02/60/62

... Express

9284007 — OE 7700742835

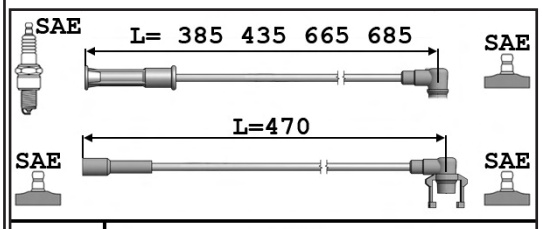

R
Class C

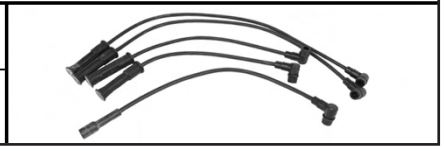

1.4	F40A	E6J734
1.4	F40Y	E6J738
1.4i	F40V	E7J720
1.4i	F40U	E7J724/26/73
1.4i	F40D	E7J728
1.4i	F40S	E7J770/71

Kangoo I -02/03 VU ...

9284011 — OE 8200805133

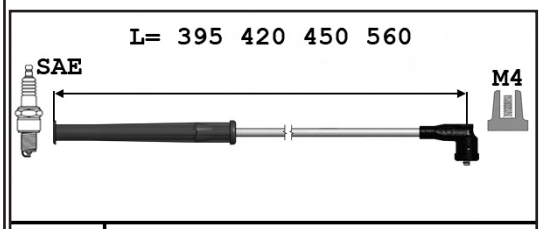

R
Class C

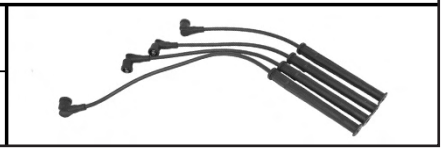

1.0i		KC0Y	D7D700/60
1.2i 8v.	02/10/99-	KC0A/0K	D7F720/22
1.2i 8v.		KC01/0F	D7F726/46
1.2i 8v.		KC1A/1M	D7F764/66

9284012 — OE 224404659R

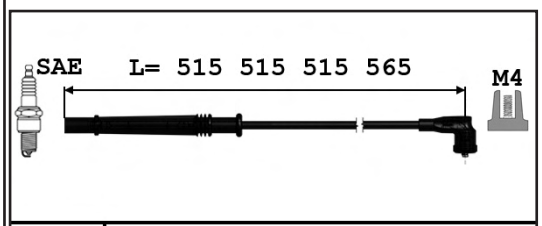

Class D

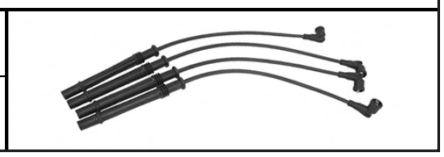

1.2i 16v.	KC1D/1K/1P	D4F730

9284004 — OE 7700107662

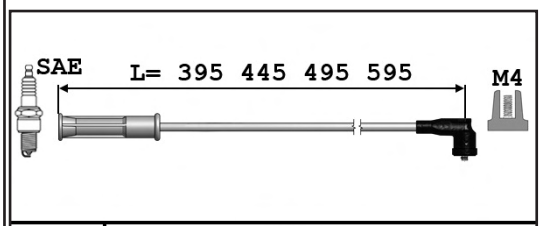

R
Class C

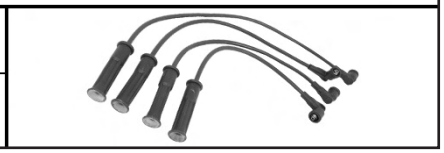

1.2i 8v.		FC0A	D7F710
1.2i 8v.	-02/10/99	FC0A	D7F720/22

... Kangoo I -02/03 VU

9284006 — OE 7700273226

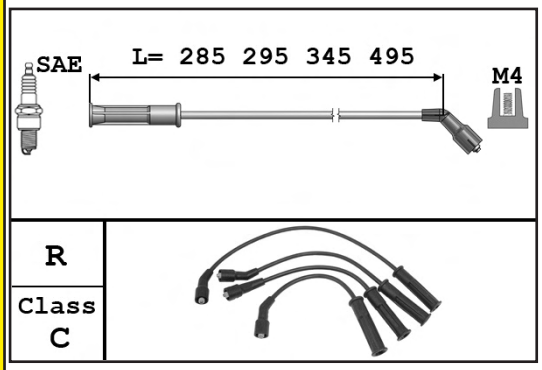

1.4i	FC0C	E7J780

9284005 — OE 224404252R

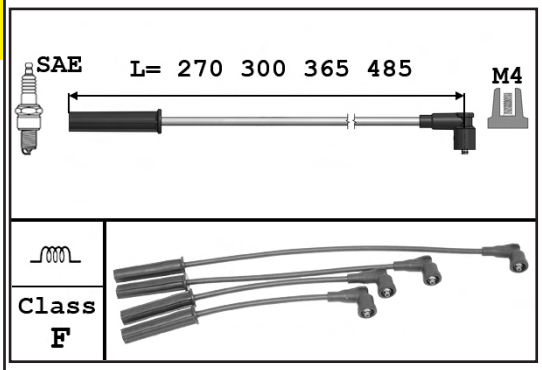

1.4i		K7J700/01
1.6i		K7M746

Kangoo I 03/03-12/07 VU ...

9284011 — OE 8200805133

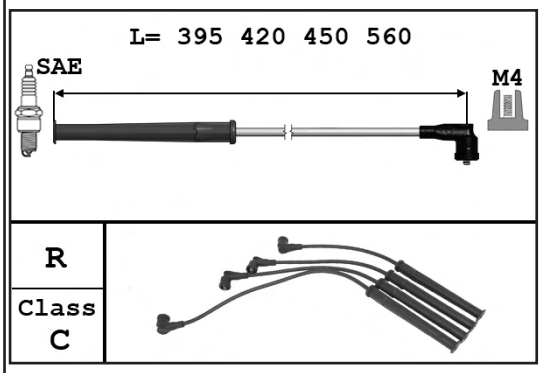

1.0i	KC0Y	D7D700/60
1.2i 8v.	KC0A/0K	D7F720
1.2i 8v.	KC01/0F	D7F726/46
1.2i 8v.	KC1A/1M	D7F764/66

9284012 — OE 224404659R

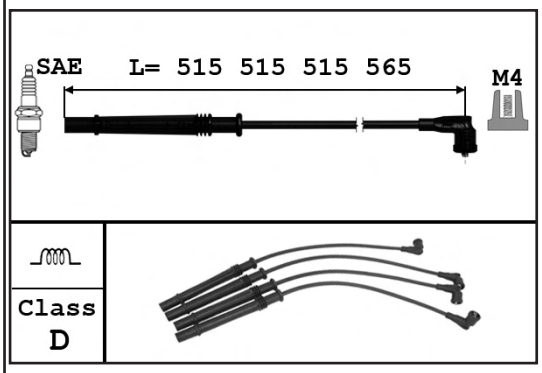

1.2i 16v.	KC1D/1K/1P	D4F730

RENAULT

... Kangoo I 03/03-12/07 VU

9284005 — **OE** 224404252R

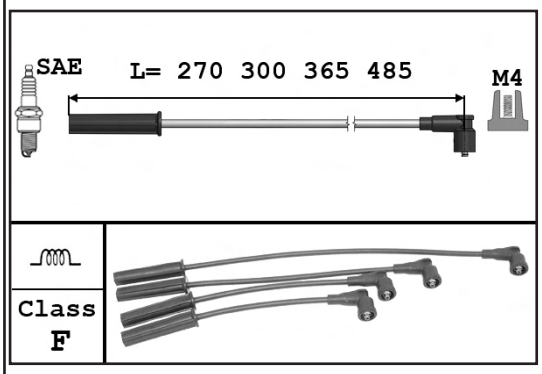

1.4i — K7J700

Kangoo II 01/08- VU

9284005 — **OE** 224404252R

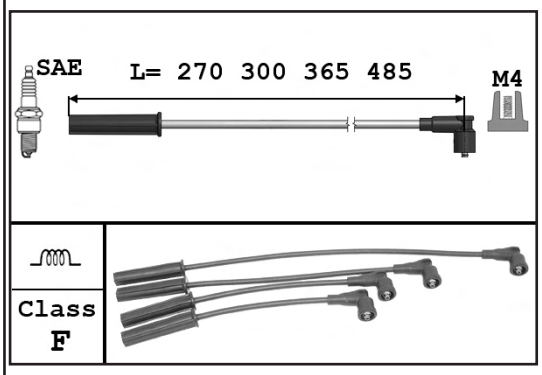

1.6i — K7M750

SEAT

Alhambra

9286028 — **OE** 037905409D

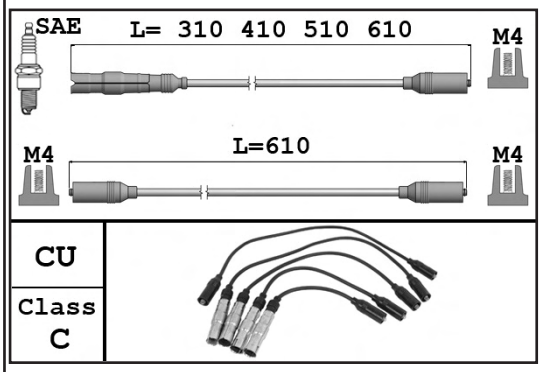

2.0i 8v. /GPL — ADY

Altea

9286084 — **OE** 03F905409C

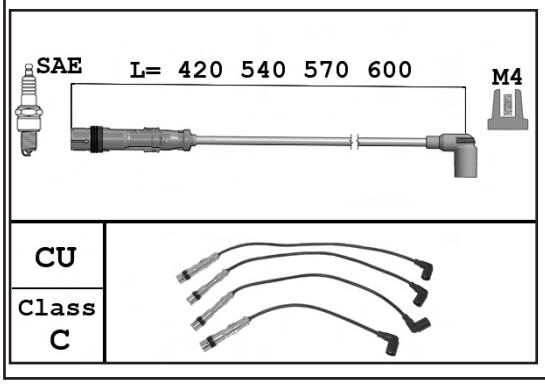

1.2 TSi — CBZB

Arosa

9286050 — OE 030905430E+030905430F+030905430G+030905430H

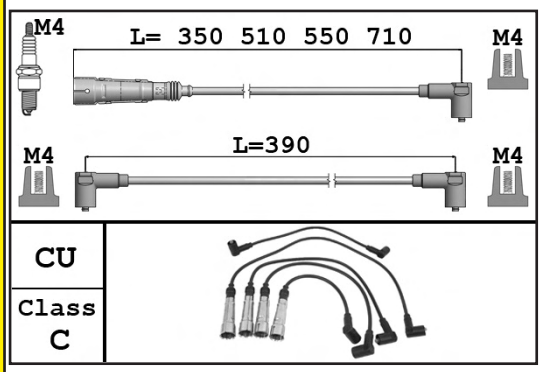

1.0i 8v. — AER ALL

9286082 — OE 032905430P+032905430Q+032905430R+032905430T

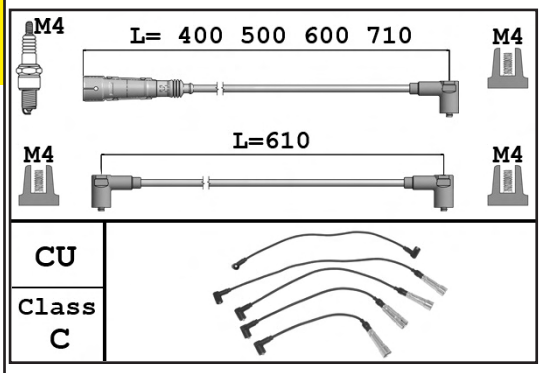

1.4i — AEX

9286048 — OE N10052904

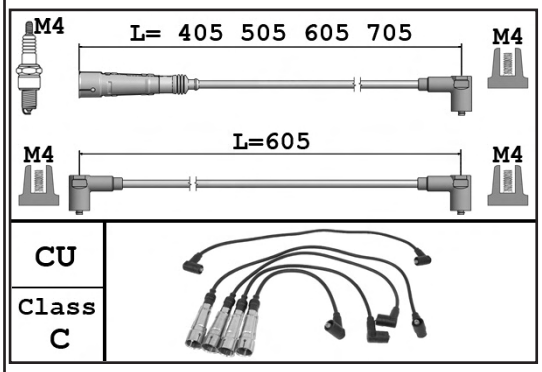

1.4i 8v. — AKV APQ

Cordoba ...

9286050 — OE 030905430E+030905430F+030905430G+030905430H

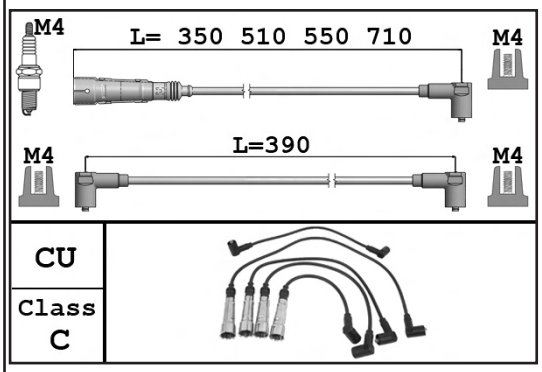

1.0i 8v. -09/99 — AER ALL

... Cordoba

9286048

OE N10052904

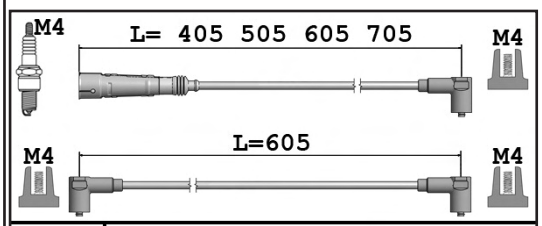

CU

Class C

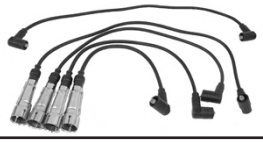

1.4i /Vario	-09/99	AEX AKV ANX APQ

9286020

OE 803998031

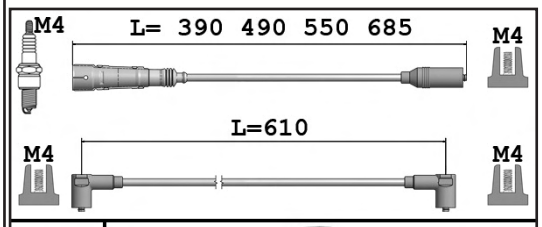

CU

Class C

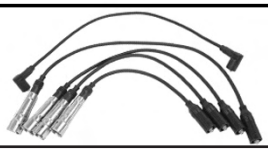

1.6i	-09/99	1F ABU

9286082

OE 032905430P+032905430Q+032905430R+032905430T

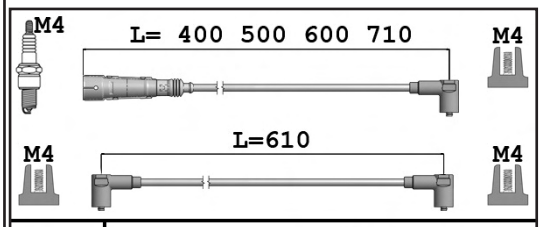

CU

Class C

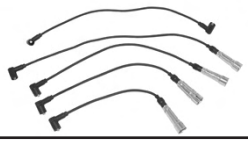

1.6i		AEE ALM

9286021

OE 06A905409A

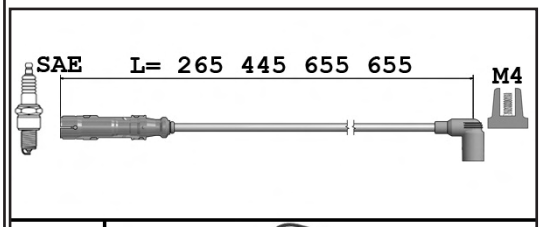

CU

Class C

1.6i	09/99-	AEH AKL APF

Ibiza II III IV 93-01(6K) ...

9286050 — OE 030905430E+030905430F+030905430G+030905430H

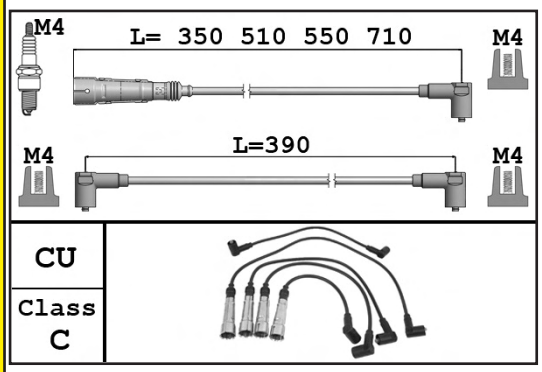

1.0i 8v.	-09/99	AER ALL

9286048 — OE N10052904

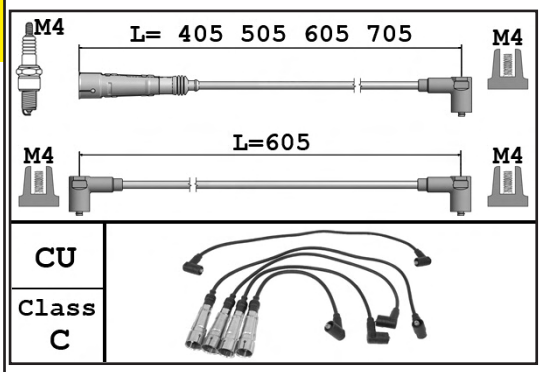

1.0i 8v.		AAU
1.3i		AAV
1.4i	-09/99	AEX AKV

9286020 — OE 803998031

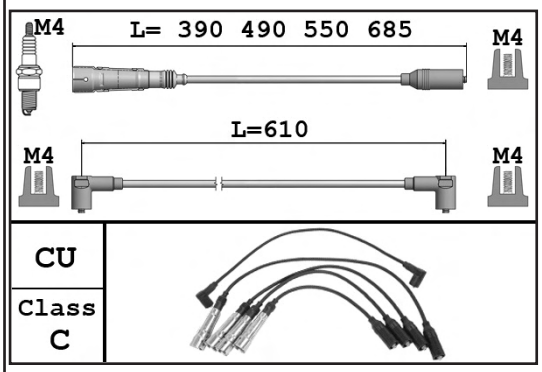

1.6i	1F ABU

9286082 — OE 032905430P+032905430Q+032905430R+032905430T

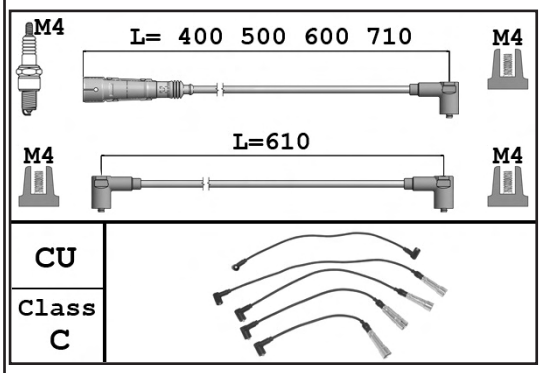

1.6i	AEE ALM

... Ibiza II III IV 93-01(6K)

9286021 — **OE** 06A905409A

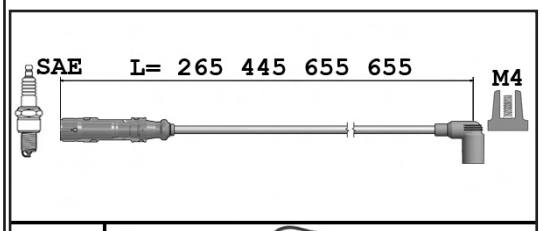

CU
Class C

1.6i	09/99-	AEH AKL APF AUR

Ibiza V 02-16 (6J 6L 6P)

9286084 — **OE** 03F905409C

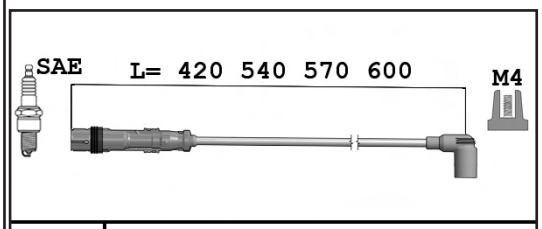

CU
Class C

1.2 TFSi TSi	CBZB

Leon

9286084 — **OE** 03F905409C

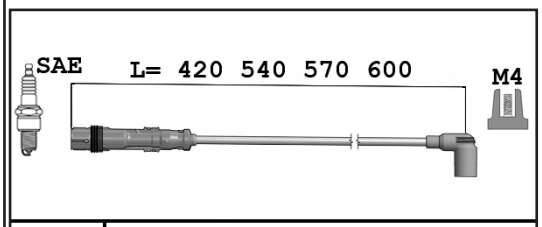

CU
Class C

1.2 TSi	CBZB

9286021 — **OE** 06A905409A

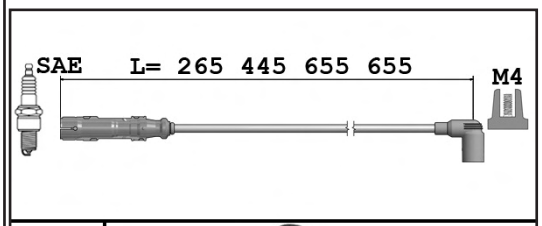

CU
Class C

1.6i	AEH AKL

SEAT

Toledo

9286084

OE 03F905409C

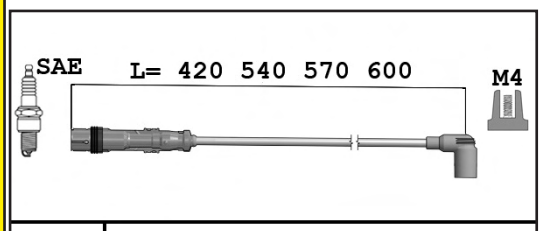

CU

Class C

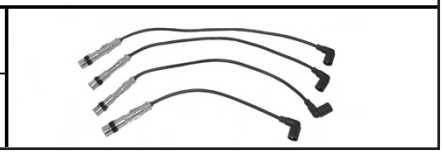

1.2 TSi	CBZA/ZB

9286021

OE 06A905409A

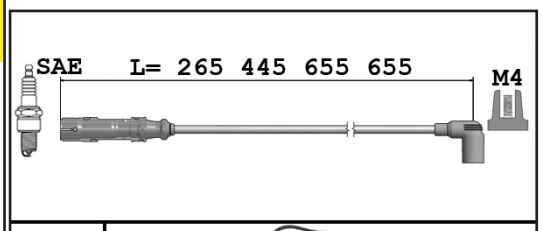

CU

Class C

1.6i	AEH AKL

9286020

OE 803998031

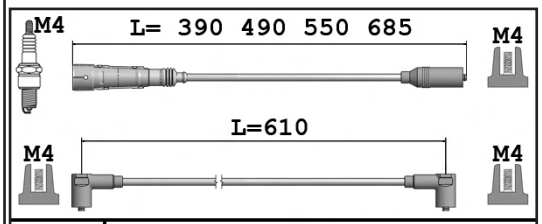

CU

Class C

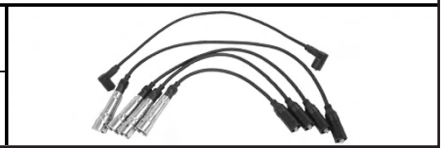

1.6/i 1.8i	-12/96	1F EZ RP

Inca ...

9286048

OE N10052904

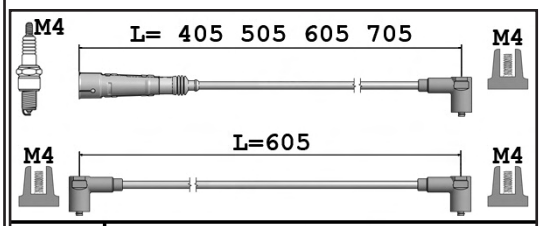

CU

Class C

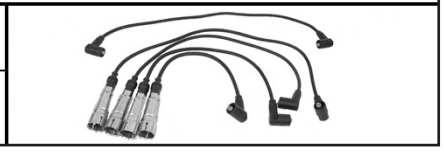

1.4i	AEX AKV AUD

SEAT

... Inca

9286082 **OE** 032905430P+032905430Q+032905430R+032905430T

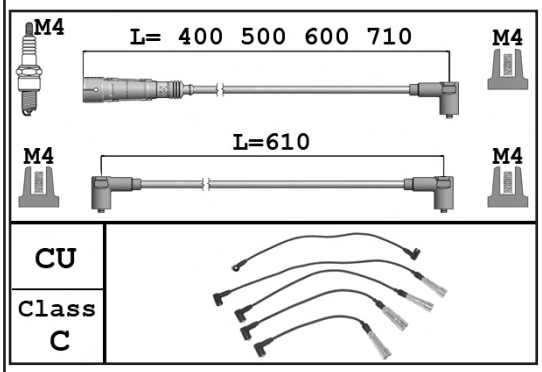

1.6i AEE

9286020 **OE** 803998031

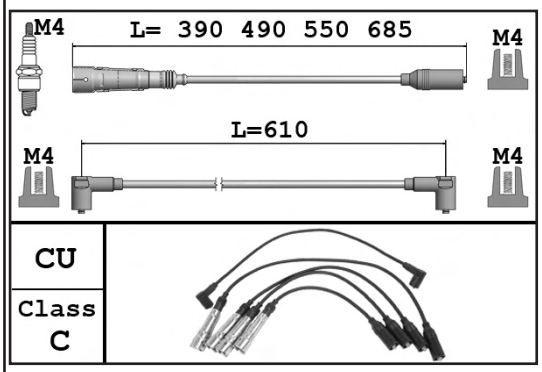

1.6i 1F

SKODA

Fabia

9286084 **OE** 03F905409C

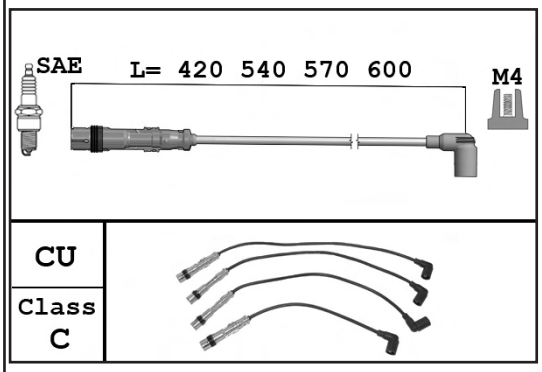

1.2 TSi CBZA/ZB

9286082 **OE** 032905430P+032905430Q+032905430R+032905430T

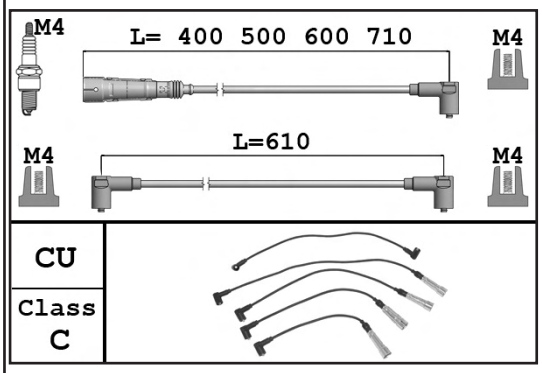

1.6i -01/98 AEE

SKODA

Felicia

9286048

OE N10052904

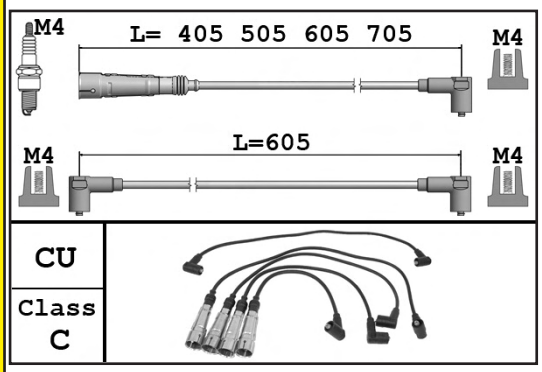

1.6i	01/98-	AEE

Octavia ...

9286084

OE 03F905409C

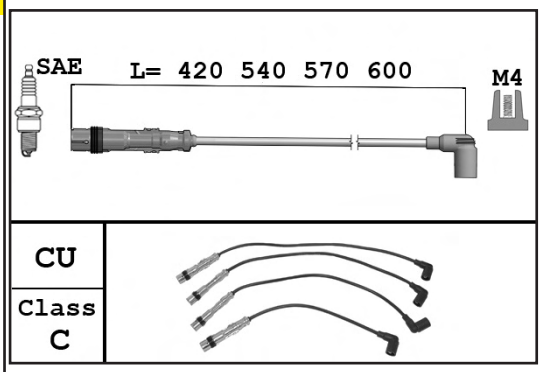

1.2 TSi	CBZB

9286082

OE 032905430P+032905430Q+032905430R+032905430T

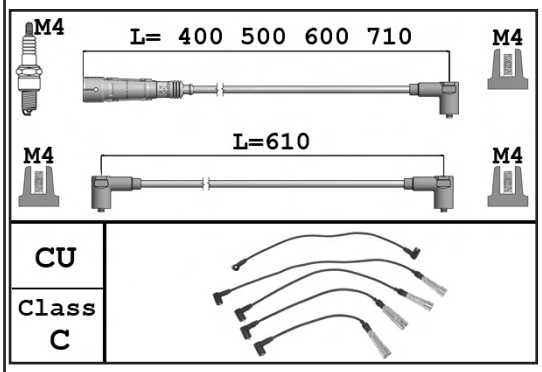

1.6i	AEE

9286021

OE 06A905409A

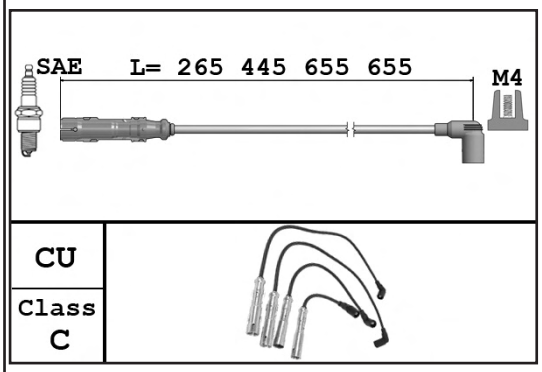

1.6i	AEH AKL

... Octavia

9286040 — **OE** 06A905405N

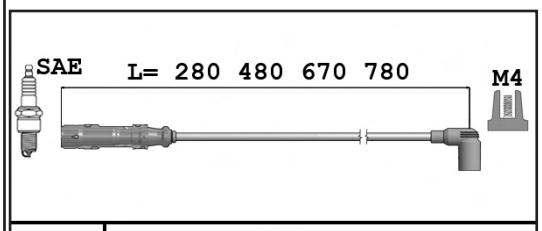

CU
Class C

2.0i 4WD Break	-09/04	AZJ

Rapid

9286084 — **OE** 03F905409C

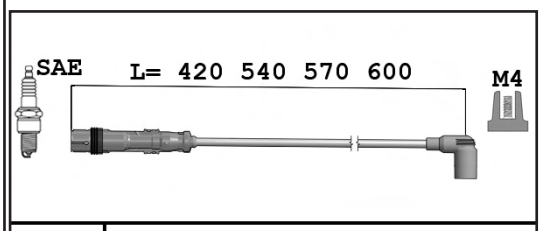

CU
Class C

1.2 TSi		CBZA/ZB

Roomster

9286084 — **OE** 03F905409C

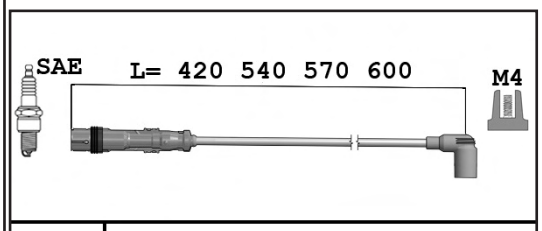

CU
Class C

1.2 TSi		CBZA/ZB

Superb

9286025 — **OE** 078905113

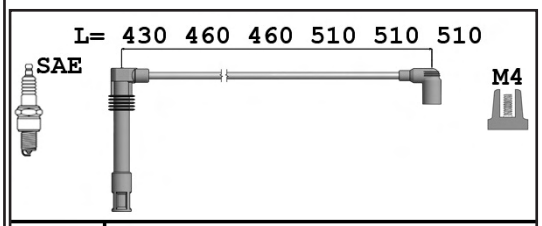

CU
Class C

2.8i V6 30v.		AMX

SKODA

Yeti

9286084	OE 03F905409C	
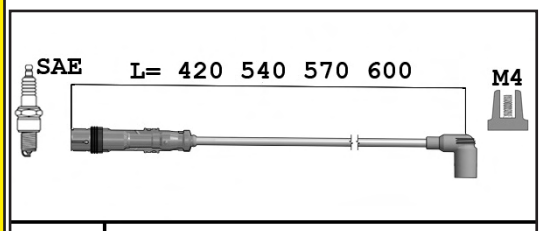	1.2 TSi	CBZB
CU Class C 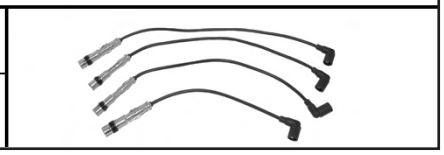		

SUBARU

Justy

9286062	OE 3370566D00	
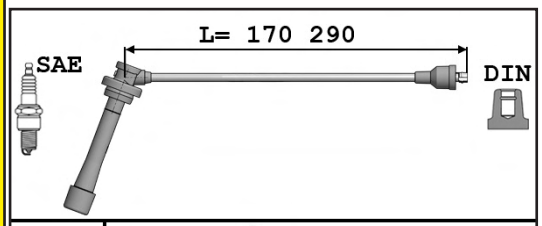	1.3i 16v. /4WD	G13BB
R Class C		

SUZUKI

Baleno

9286062	OE 3370566D00	
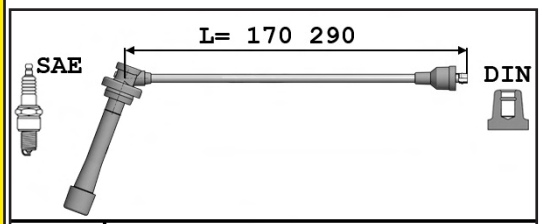	1.3i 16v.	G13BB
R Class C		

Carry

9286062	OE 3370566D00	
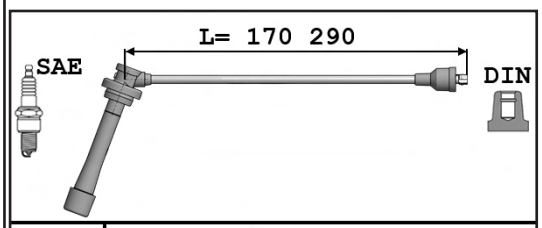	1.3i 16v.	G13BB
R Class C		

Jimny

9286062	OE 3370566D00	
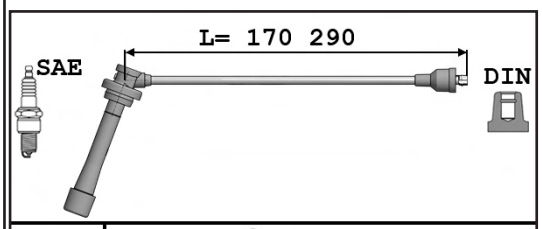	1.3i /4WD	G13BB
R Class C		

Ignis

9286062	OE 3370566D00	
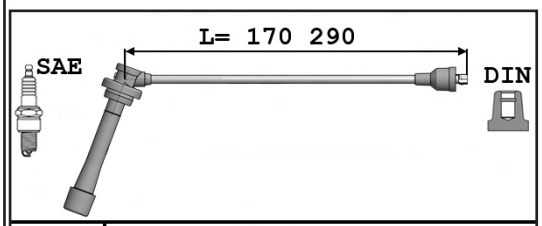	1.3i /4WD 1.5i /4WD	M13A M15A
R Class C		

Liana

9286062	OE 3370566D00	
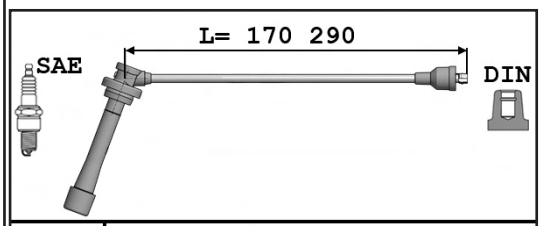	1.3i 1.6i /4WD 1.8i /4WD	M13A M16A M18A
R Class C		

SUZUKI

Swift

9286062	OE 3370566D00	
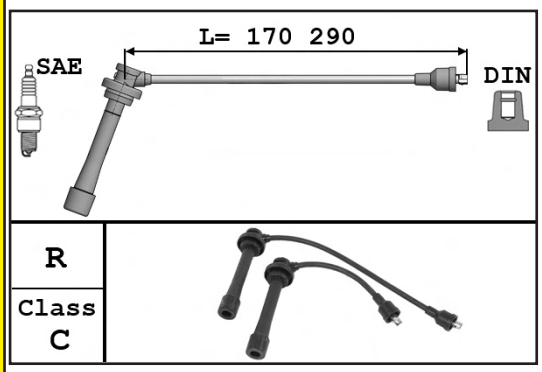	1.3i 16v. /4WD	G13BA/BB

Grand Vitara

9286062	OE 3370566D00	
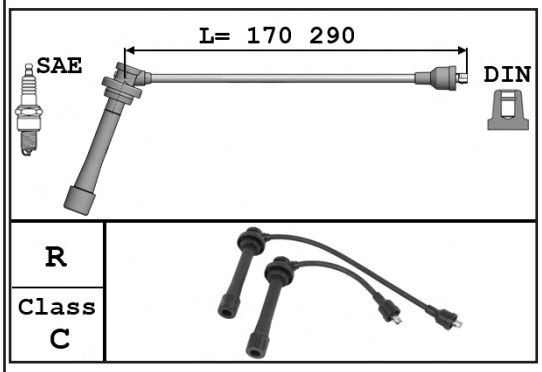	1.6i 16v. 4WD	G16B

Wagon R

9286062	OE 3370566D00	
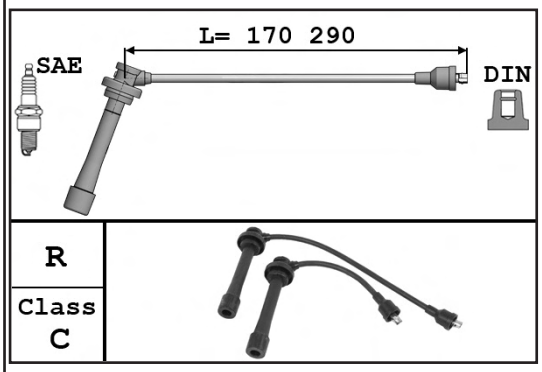	1.3i 16v. /4WD	G13BB

New Beetle

9286084

OE 03F905409C

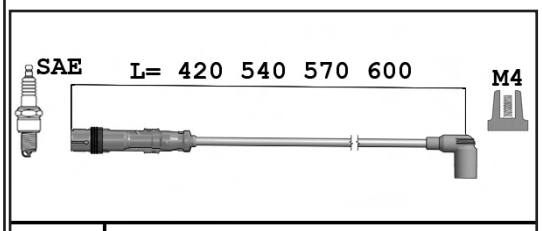

CU

Class C

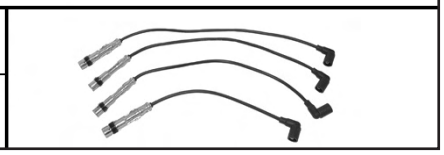

1.2 TSi

CBZB

9286040

OE 06A905405N

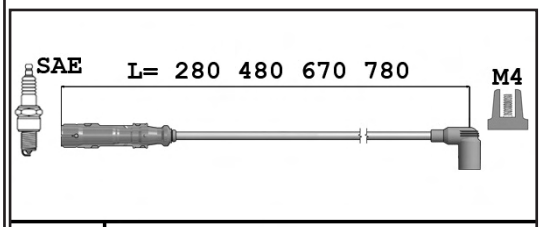

CU

Class C

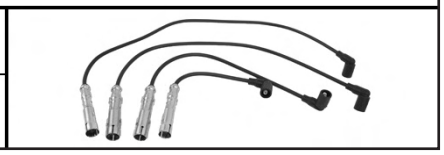

2.0i

AZG AZJ

Bora

9286021

OE 06A905409A

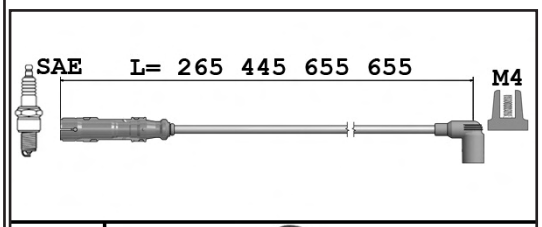

CU

Class C

1.6i

AEH AKL APF

9286040

OE 06A905405N

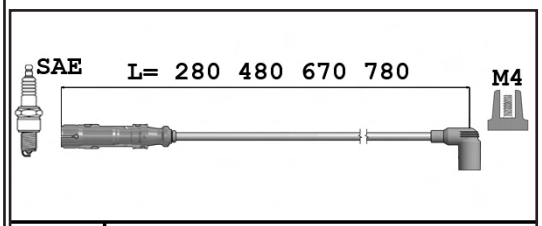

CU

Class C

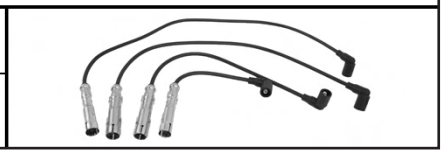

2.0i /4WD

AZG AZJ

Corrado

9286020 — **OE** 803998031

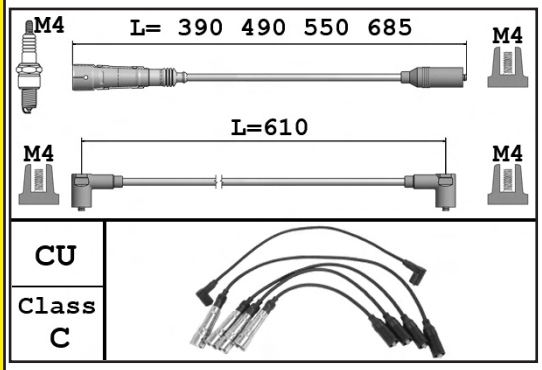

1.8i Komp G60	PG
2.0i	2E ADY

Golf I Cabriolet

9286020 — **OE** 803998031

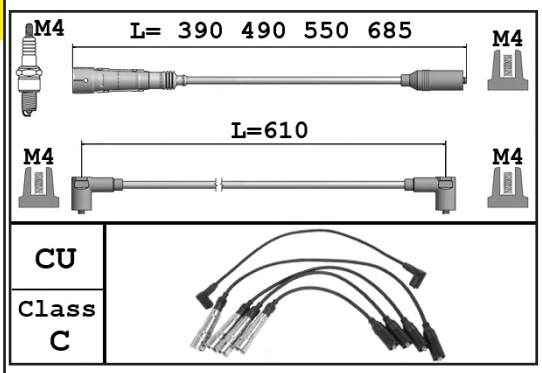

1.6/i	EW RE
1.8/i	2H DX EX

Golf II 83-91

9286020 — **OE** 803998031

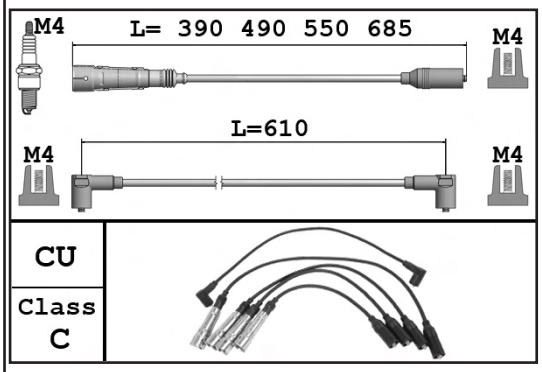

1.0 8v.	GN
1.6	ABN EZ HM PN RF
1.8 GTi	EV GZ PB
1.8/i /4WD	1P GU GX HV RH RP
1.8i	RD

9286082 — **OE** 032905430P+032905430Q+032905430R+032905430T

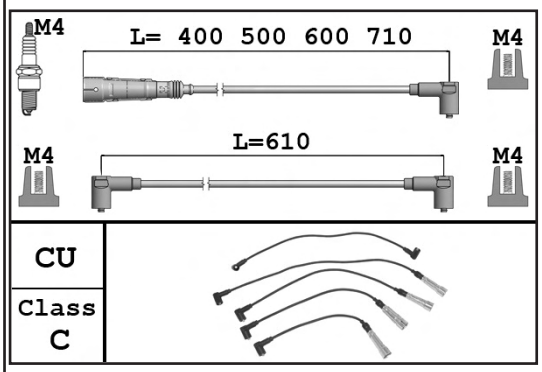

1.3	HK MH

Golf III 91-97

VOLKSWAGEN

9286048

OE N10052904

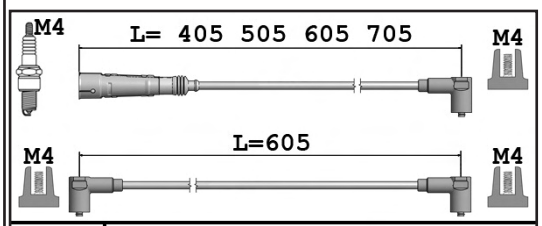

CU

Class C

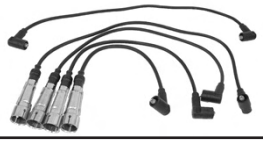

1.4i	AEX

9286082

OE 032905430P+032905430Q+032905430R+032905430T

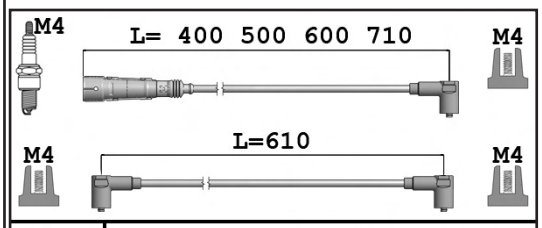

CU

Class C

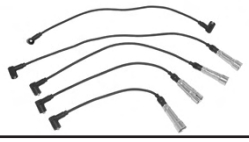

1.6i	ABU AEA AEE

9286021

OE 06A905409A

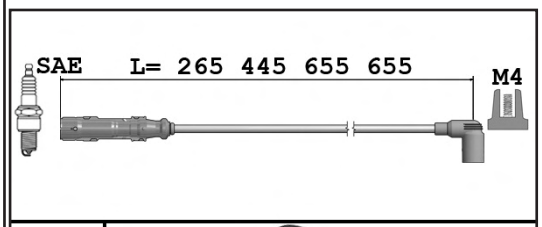

CU

Class C

1.6i	AEK AFT AKS

9286020

OE 803998031

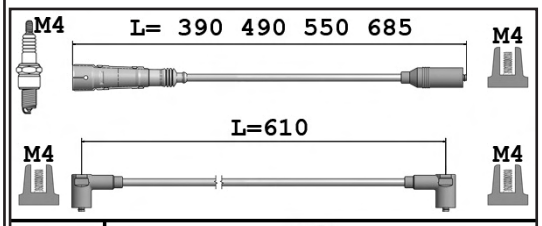

CU

Class C

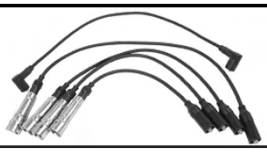

1.8i /4WD 2.0i	ABS ADY AGG

Golf III Cabriolet

9286021 — OE 06A905409A

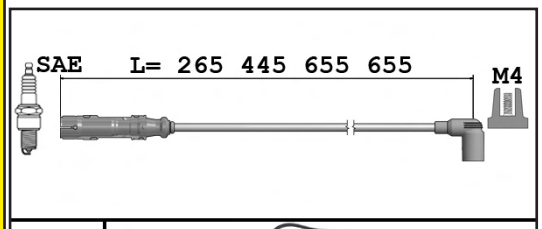

CU
Class C

1.6i	AKS

9286020 — OE 803998031

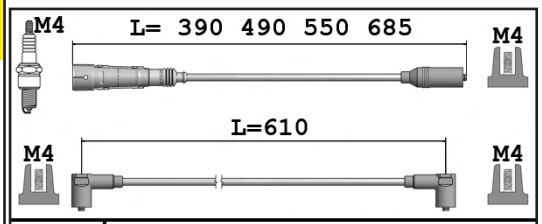

CU
Class C

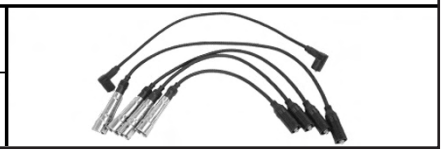

1.8i 2.0i	ABS ADY AGG

Golf IV 97-03

9286021 — OE 06A905409A

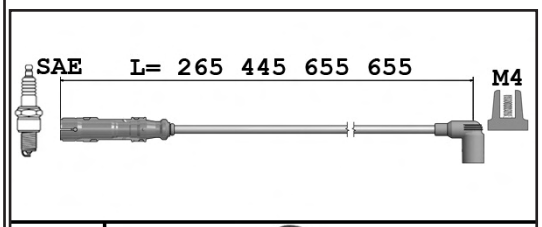

CU
Class C

1.6i	AEH AKL APF

9286040 — OE 06A905405N

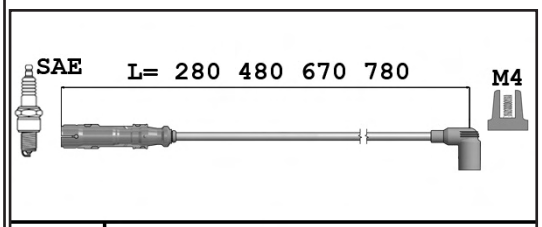

CU
Class C

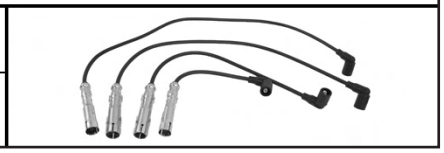

2.0i GTi 2.0i GNV Break	AZG AZJ BEH

Golf IV Cabriolet

9286021	OE 06A905409A	
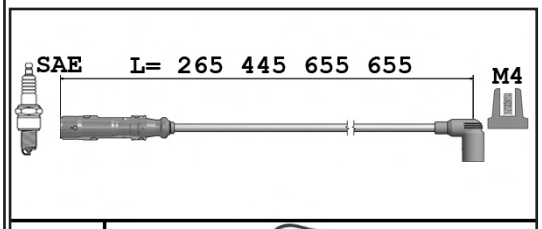	1.6i	AFT AKS
CU Class C		

9286020	OE 803998031	
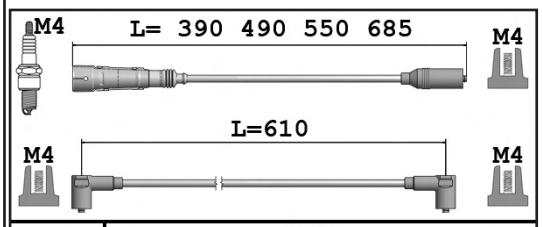	1.8i 2.0i	ANP AGG AKR ATU AWF AWG
CU Class C 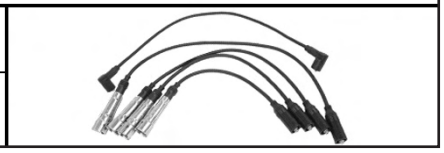		

Golf VI 08-12

9286084	OE 03F905409C	
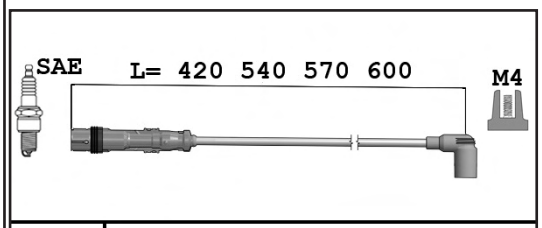	1.2 TSi	CBZA/ZB
CU Class C 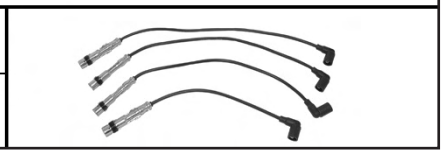		

Golf VI Cabriolet

9286084	OE 03F905409C	
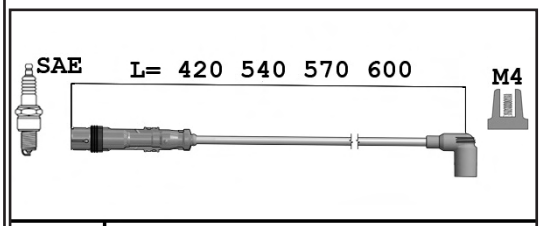	1.2 TSi	CBZB
CU Class C 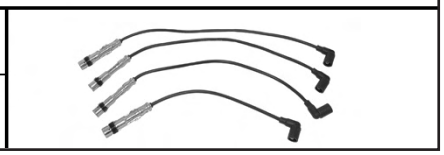		

Jetta

9286084 — OE 03F905409C

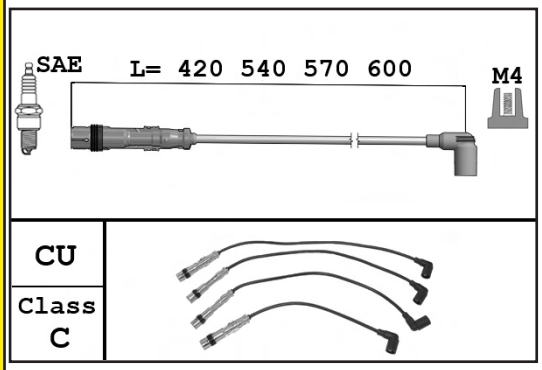

1.2 TSi	CBZB

9286020 — OE 803998031

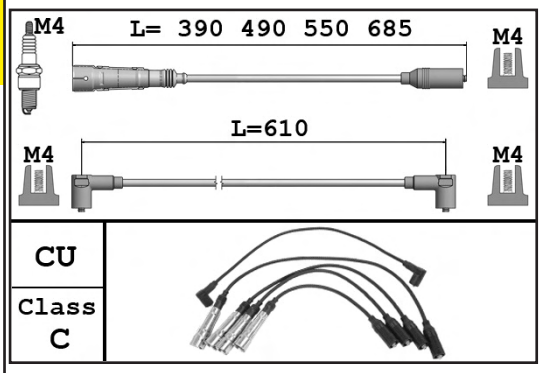

1.6	ABN EZ HM PN
1.8i 4WD	1P
1.8 /4WD	GU
1.8i	GZ PB PF RD RP

Lupo

9286050 — OE 030905430E+030905430F+030905430G+030905430H

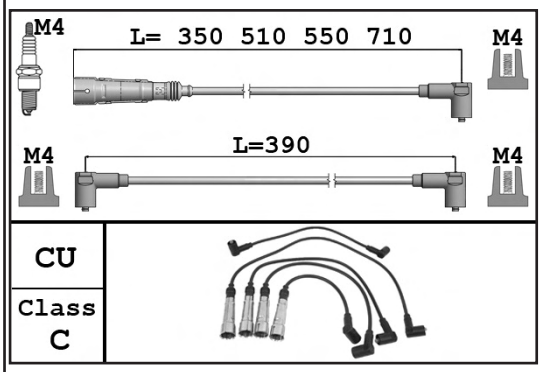

1.0i 8v.	AER ALL

Passat I II 73-88 ...

9286020 — OE 803998031

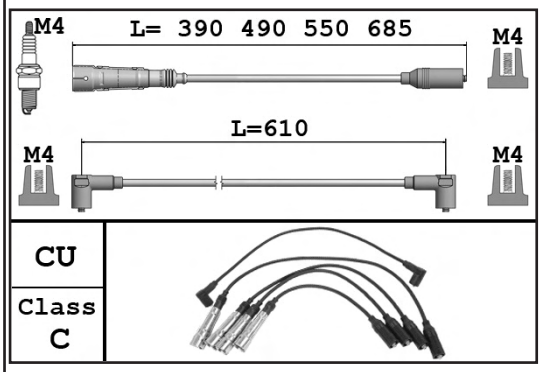

1.6	03/85-	DT
1.6i		RL
1.8 /4WD		DS JN
1.8i		DZ

... Passat I II 73-88

9286065 — OE 437998031B

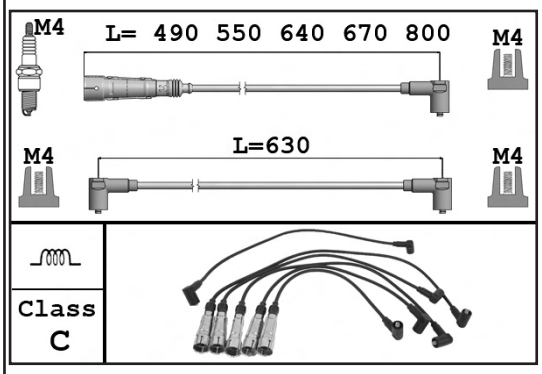

2.0i /4WD 2.2i 4WD 2.2i	HP JS JT KV KX

Passat V 96-05

9286053 — OE N10243611+N10204402

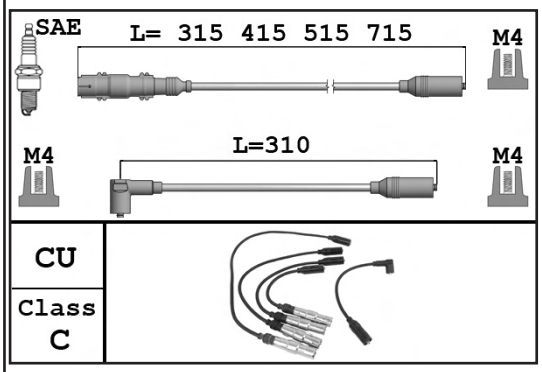

1.6i	10/96-10/00	ADP

9286060 — OE 058905409A

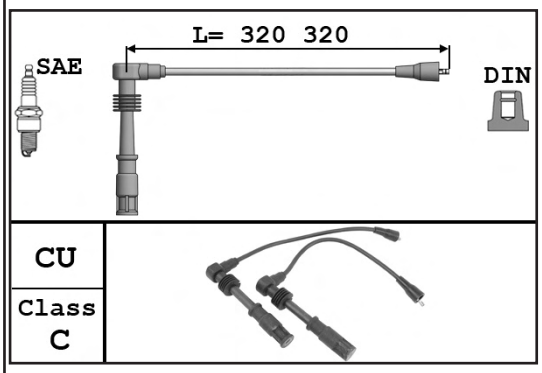

1.8i 20v. /4WD	ADR AFY APT ARG

9286025 — OE 078905113

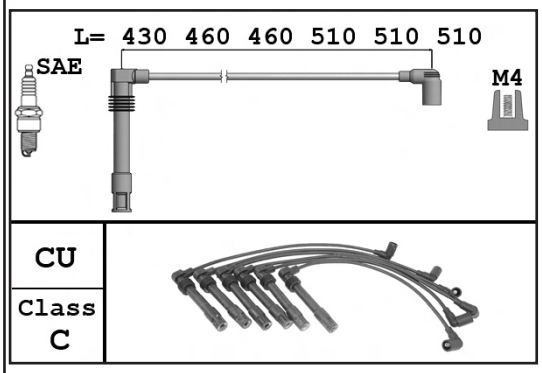

2.8i V6 30v. /4WD 2.8i V6 4WD	ACK AGE AMX ATQ

Polo -05/09 ...

9286082 — OE 032905430P+032905430Q+032905430R+032905430T

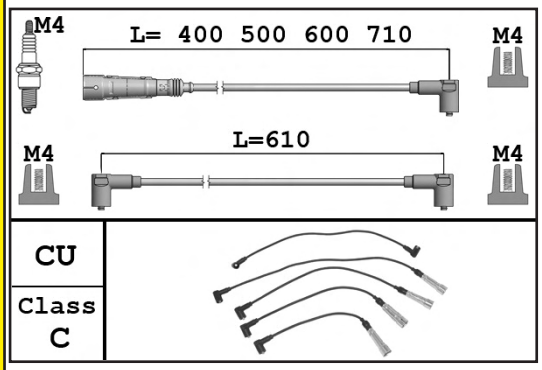

1.0i 8v. Variant		AAK ACM
1.0i 8v. Coupé		AAK ACM
1.3i Variant		2G 3F AAV NZ
1.3 Variant	08/84-	HK MH
1.6i Flight		AEE ALM
1.6i Variant		AEE ALM

9286048 — OE N10052904

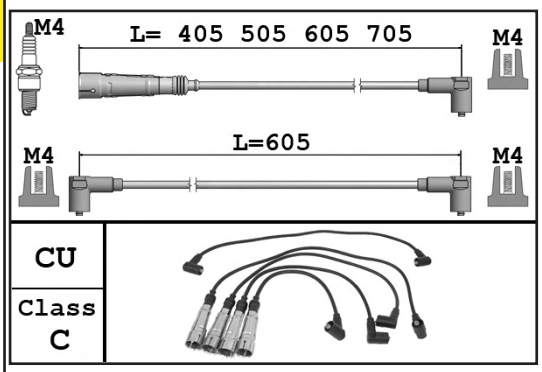

1.0i	AAU
1.4i	AEX AKV APQ

9286050 — OE 030905430E+030905430F+030905430G+030905430H

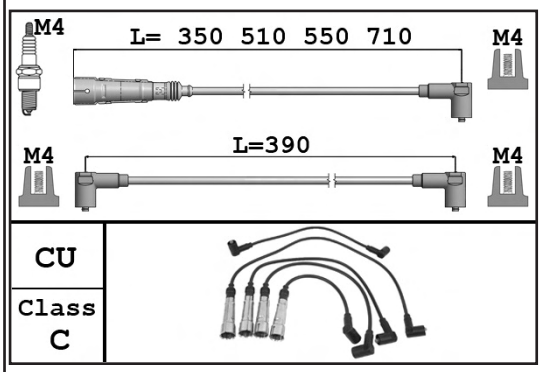

1.0i 8v.	AER ALL

9286020 — OE 803998031

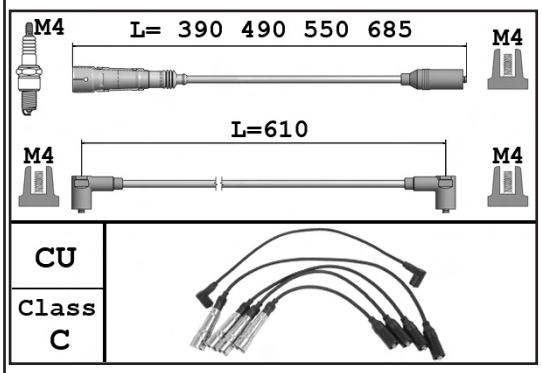

1.6i	1F

... Polo -05/09

9286021 — **OE** 06A905409A

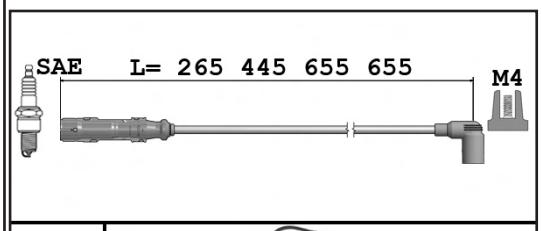

CU
Class C

1.6i	AEH AKL APF AUR

Polo (6C 6R) 06/09-08/17

9286084 — **OE** 03F905409C

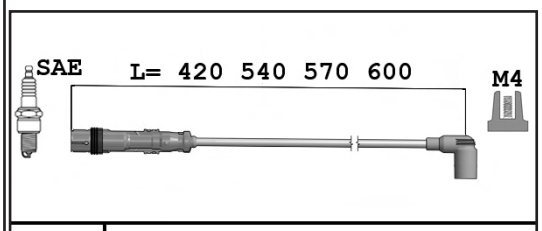

CU
Class C

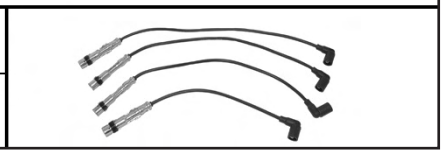

1.2 TSi	CBZB/ZC

Santana ...

9286082 — **OE** 032905430P+032905430Q+032905430R+032905430T

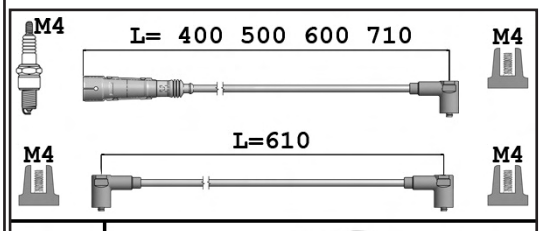

CU
Class C

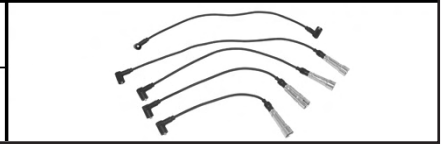

1.6i	08/84-12/84	WV

9286020 — **OE** 803998031

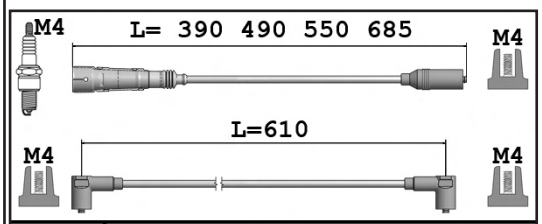

CU
Class C

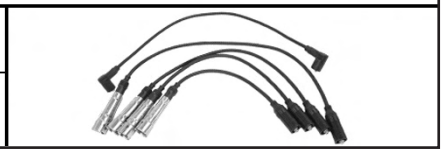

1.8	DS

... Santana

9286065	OE 437998031B	
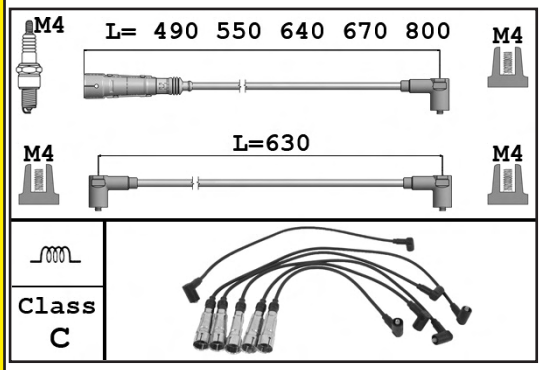	2.0i	HP JS

Scirocco

9286020	OE 803998031	
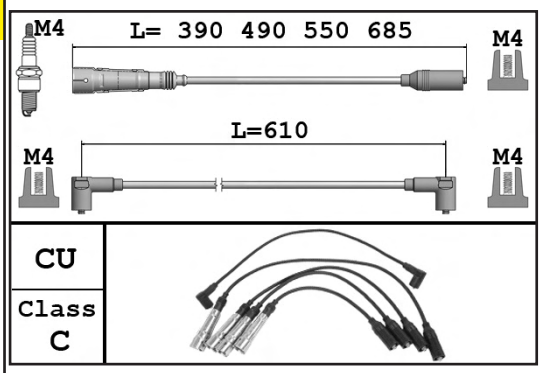	1.6 1.6i 1.8i 1.8	EW RE DX JH EX

Sharan

9286028	OE 037905409D	
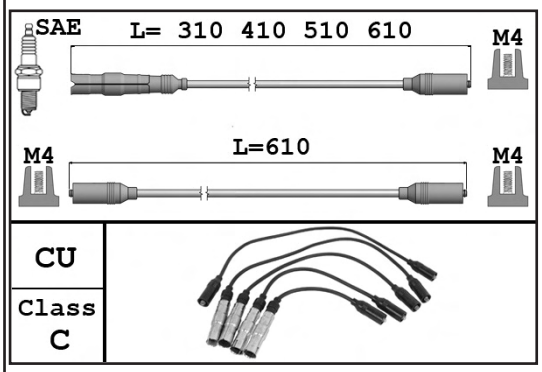	2.0i /GPL	ADY

Touran ...

9286084	OE 03F905409C	
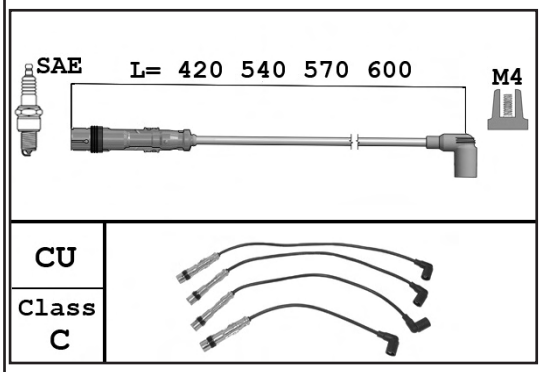	1.2 TSi	CBZB

... Touran

9286040

OE 06A905405N

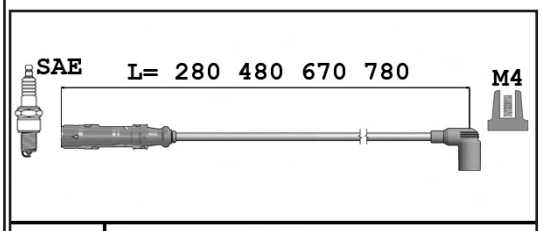

CU

Class C

2.0i GNV	BSX

Vento

9286048

OE N10052904

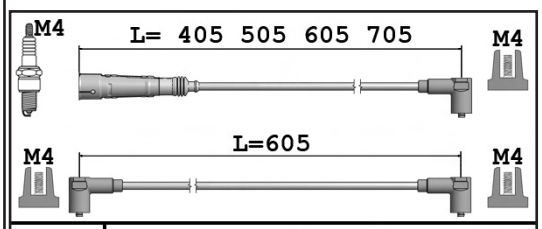

CU

Class C

1.6i	AEE

9286020

OE 803998031

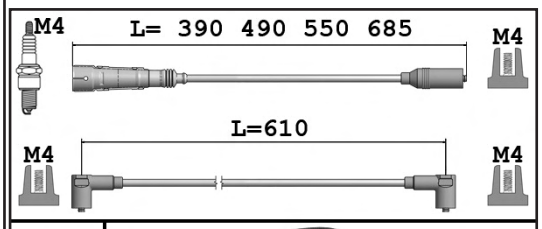

CU

Class C

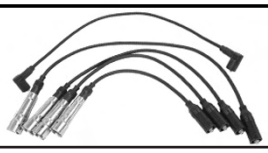

2.0i /GT 2.0i	ADY AGG AKR

Caddy ...

9286084

OE 03F905409C

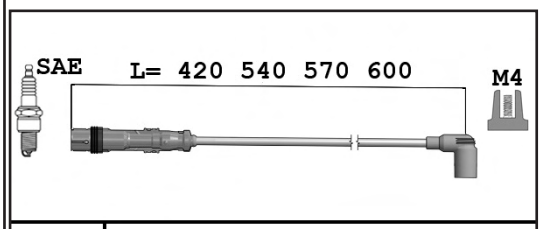

CU

Class C

1.2 TSi	CBZA/ZB

... Caddy

9286048

OE N10052904

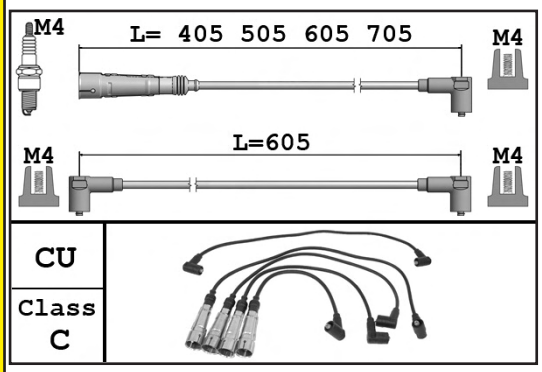

1.4i	AEX APQ AUD
1.6i	AEE

9286020

OE 803998031

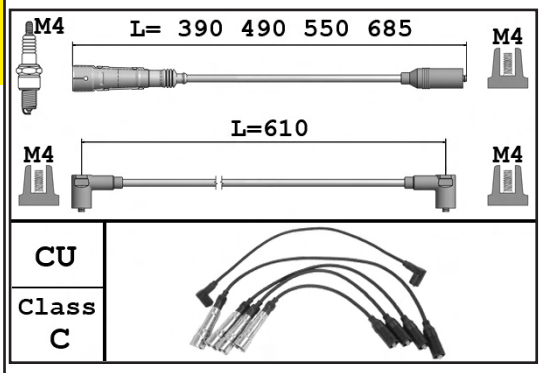

1.6i	-05/97	1F
1.6	08/84-	EM EW
1.8i		JH

9286040

OE 06A905405N

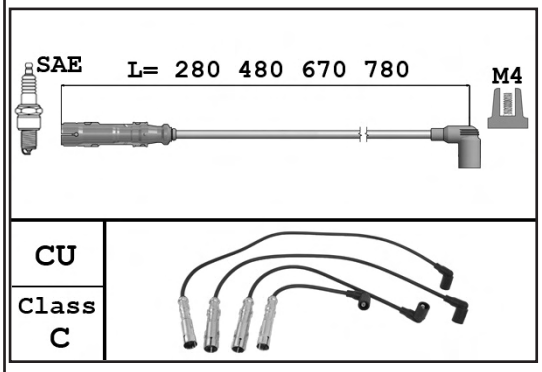

2.0i GNV	BSX

Transporter TYP3 (F24) 80-92

9286057

OE 071998031

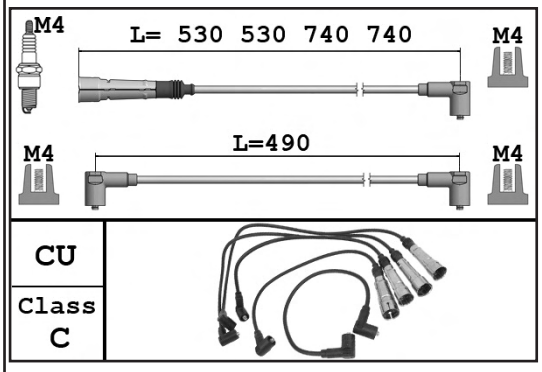

1.9 /4WD	08/84-	DG
2.0i	08/84-	CU
2.1i /4WD		DJ MV

Transporter TYP4 (F70/D) 91-03

VOLKSWAGEN

9286082 **OE** 032905430P+032905430Q+032905430R+032905430T

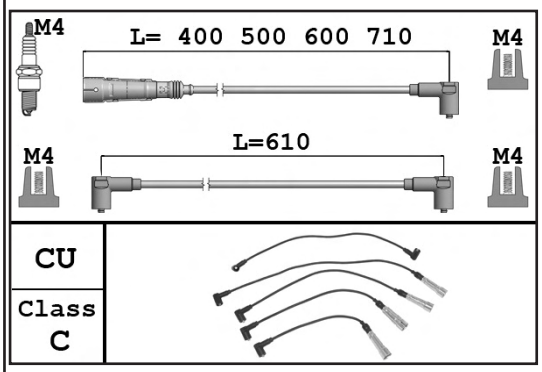

1.8	PD

66

VOLVO

9284017 **OE** -

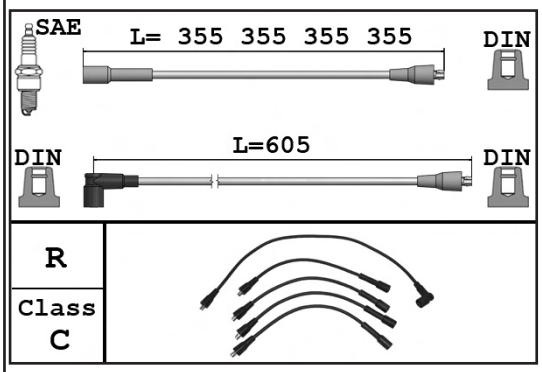

1.1 1.3	B11 B130

850

9286035 **OE** 9135700+9445258

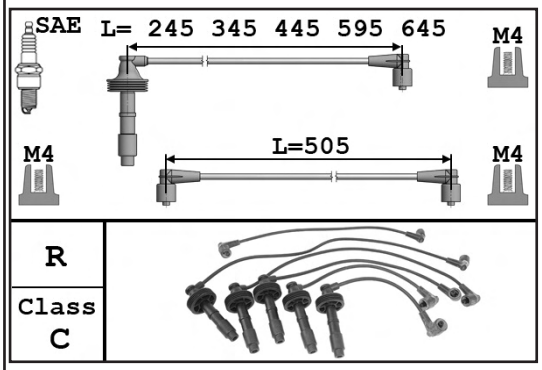

2.0i 2.0i Turbo 2.3i 20v. Turbo 2.4i 2.4i 20v. Turbo /4WD	B5204FS B5204T2 B5234T4/5 B5254FS B5254T

VOLVO

C30

9286031 — **OE** 30731424

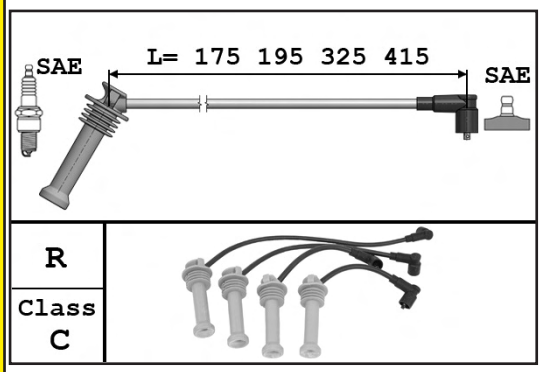

1.6i 16v.	B4164S3

C70

9286035 — **OE** 9135700+9445258

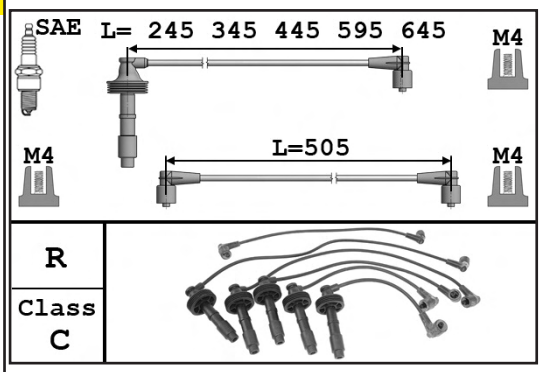

2.0i Turbo	-06/98	B5204T2/3
2.3i 20v. Turbo	-06/98	B5234T3
2.4i 20v. Turbo	-06/98	B5254T

S40 V40

9286031 — **OE** 30731424

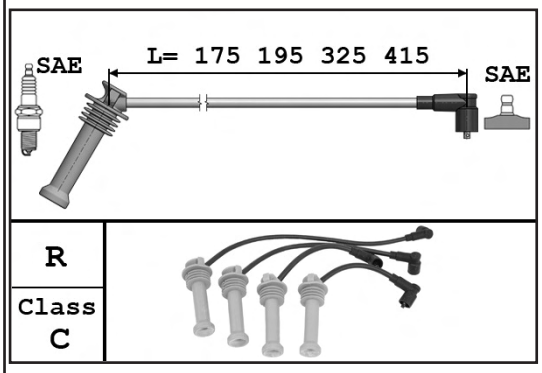

1.6i 16v. S40	B4164S3

9284015 — **OE** 1275284

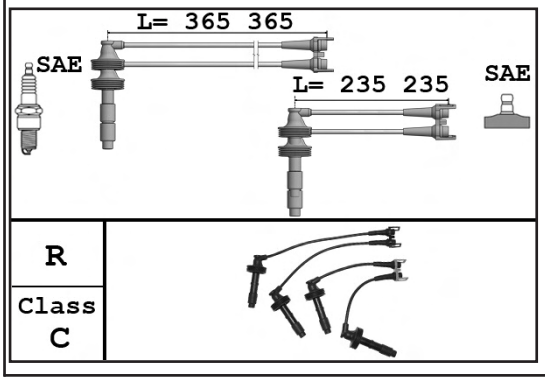

1.6i	B4164S/2
1.8i 16v.	B4184S/2/3/9
1.9i 16v. Turbo	B4194T/2
2.0i 16v. /Turbo /GPL	B4204S/2/T

V50

9286031

OE 30731424

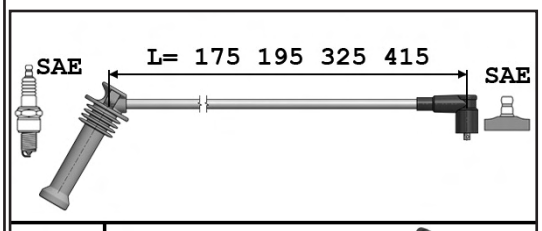

R

Class C

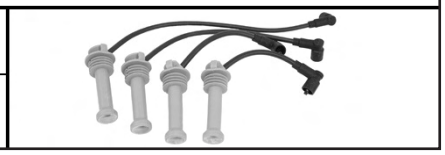

1.6i 16v.	B4164S3

S70 V70

9286035

OE 9135700+9445258

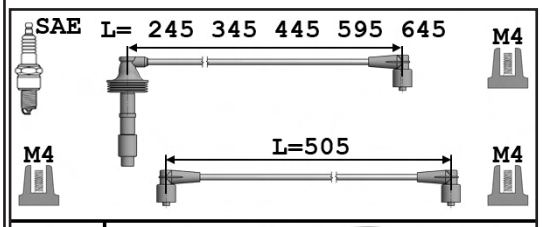

R

Class C

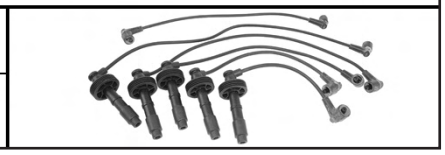

2.0i Turbo /4WD S70	-06/98	B5204T2/3
2.0i Turbo /4WD V70	-06/98	B5204T2/3
2.3i 20v. Turbo /4WD V70	-06/98	B5234T3/4/6/7
2.3i 20v. Turbo S70	-06/98	B5234T3/4
2.4i Turbo /4WD V70	-06/98	B5254T
2.5i 20v. Turbo /4WD	-06/98	B5254T

CROSS

SASIC	BERU	EFI BOUGICORD	NGK
9280001	ZEF793	4331	7275
9280002	ZEF1044	4333	8480
9280003	ZEF813	4334	7285
9280004	ZEF756	3398	7371
9280005	ZEF790	4310	8485
9284001	ZEF1185	1431	8234
9284002	ZEF1113	2457	7175
9284003	ZEF1251	7420	8183
9284004	ZEF1186	1429	8185
9284005	ZEF1128 / ZEF1546 / ZEF1627	2459	7200
9284006	ZEF1094	2458	4081
9284007	ZEF735	2456	7368
9284009	ZEF797	4404	8487
9284010	ZEF729	1413	-
9284011	ZEF1602	1444	44330
9284012	ZEF1604	-	44278
9284013	ZEF1612	8120	44225
9284015	ZEF1232	6462	8492
9284016	ZEF758	3414	7375
9284017	ZEF796	4404	8502
9286002	ZEF725	-	4069
9286003	ZEF1129 / ZEF1609	7216	44277
9286004	ZEF727	-	0814 / 6257
9286005	ZEF1076	-	4077
9286007	ZEF1519	-	5506
9286009	ZEF983	-	-
9286014	ZEF1477	8112	9262
9286015	ZEF891	-	44265 / 5075
9286017	ZEF787	4158	8192
9286018	ZEF1639	-	0709
9286020	ZEF561	4102	-
9286021	ZEF989	-	-
9286022	ZEF672	5101 / 8101 / 8106	0810
9286025	ZEF1219	-	0518
9286028	ZEF1222	-	0961
9286029	ZEF1480	-	2476
9286031	ZEF1549	4178	-
9286033	ZEF1556	9912	6349

CROSS

SASIC	BERU	EFI BOUGICORD	NGK
9286035	ZEF1231	6468	8468
9286037	ZEF466	4110	0742
9286040	ZEF1496	-	-
9286043	ZEF1628	-	8541
9286044	ZEF1634	-	4063
9286045	ZEF1598	8113	4746
9286047	ZEF1201	4206	2995
9286048	ZEF716	-	0941
9286049	ZEF1539	8119	6984
9286050	ZEF1189	9436	7313
9286051	ZEF1136	7412	44332
9286053	ZEF1223	-	0515
9286054	ZEF719	4148	0641
9286055	ZEF1608	8116	6020
9286057	ZEF520	-	0937
9286058	ZEF1142	7215	8275
9286059	ZEF1530	-	6299
9286060	ZEF1367	-	2348
9286061	ZEF1596	9904	44220
9286062	ZEF1147	-	2706
9286063	ZEF1105	-	6020
9286064	ZEF1181	4204	7209
9286065	ZEF612	4103 / 4117 / 4180 / 9220	0516
9286077	ZEF1135	-	0691 / 5506
9286079	ZEF1115	4178	8542
9286080	ZEF995	-	6257
9286081	ZEF988	-	44336
9286082	ZEF562	7248	0937 / 0947
9286084	ZEF1629	-	44316
9286085	ZEF1633	-	6317
9286087	ZEF1412	-	0757
9286088	ZE757	-	0561

COMMENT COMMANDER

AUPRÈS DE VOTRE DÉPÔT LE PLUS PROCHE :

voir coordonnées au dos

EN LIGNE SUR NOTRE SITE E-CATALOGUE :

sur www.sasic-b2b.fr

VOUS POUVEZ ÉGALEMENT,

ENVOYER DIRECTEMENT VOTRE COMMANDE AUPRÈS DE NOS ÉQUIPES :

Par mail à ser.metro@sasic.fr
Par téléphone au 02.33.67.80.20 si vous avez besoin de précision
Par fax au 02.33.67.80.29

POUR TROUVER LA BONNE RÉFÉRENCE :

- Catalogues papier
- Catalogue en ligne
- Et bien sûr la hotline SASIC reste à votre disposition pour tout complément d'information au 02.33.67.80.00

Les dépôts France / *Warehouses in France*

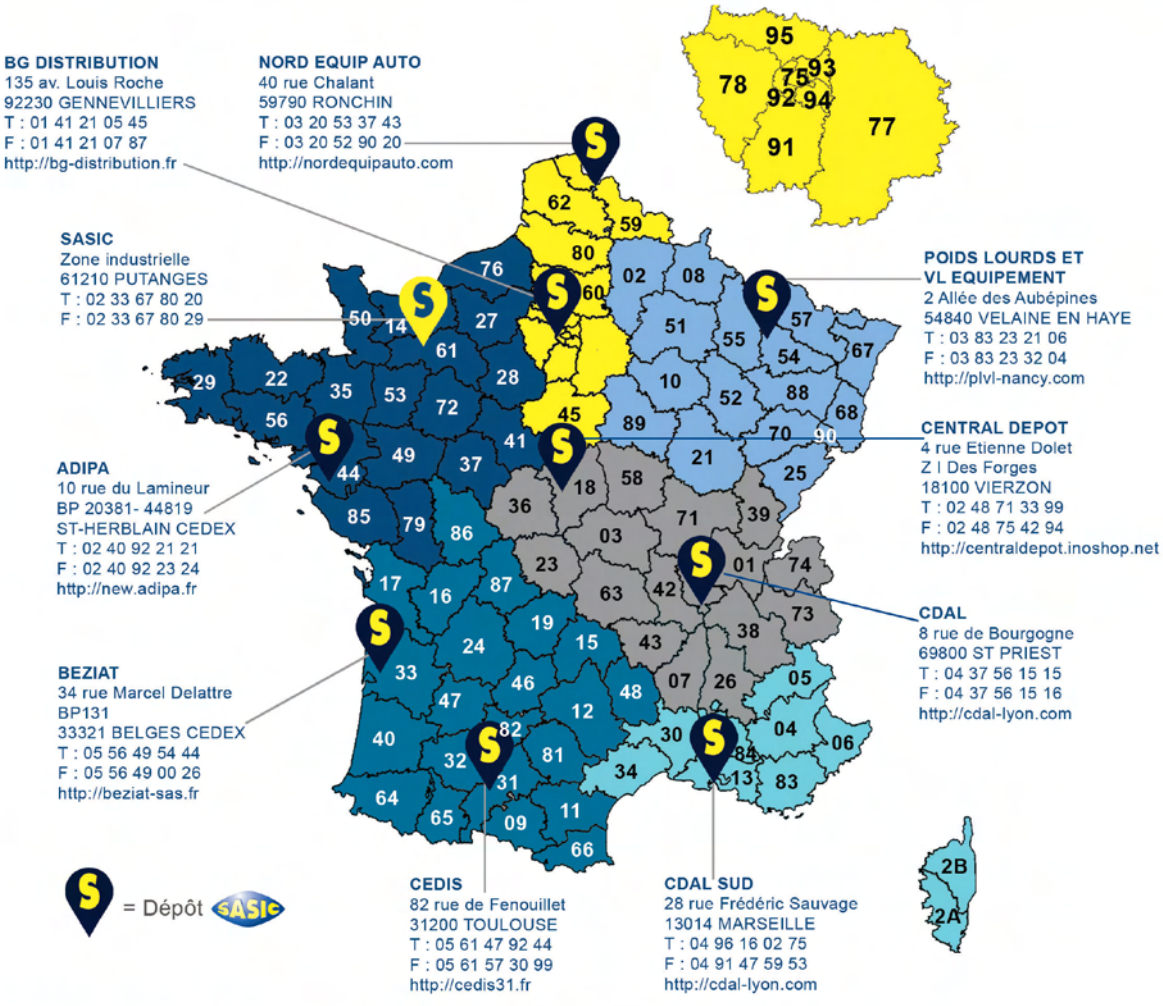

L'équipe Sasic en région / Domestic Sales Team

Christophe MARIE 07 87 24 26 02 c.marie@sasic.fr	**Bruno PELLIER** 06 88 41 93 80 b.pellier@sasic.fr	**Laëtitia COLIN** 06 72 07 86 67 l.colin@sasic.fr	**Rachel LAPORTE** 06 77 78 03 09 sasic.laporte@orange.fr
Jean-Jacques ZARAGOZA 06 14 51 00 16 jeanjacques@eac-zaragoza.fr	**Thierry CORBIN** 06 07 28 76 97 tcorbin2@wanadoo.fr	**Jean-Marie JOURDREN** *Directeur commercial France* 02 33 67 80 20 ser.metro@sasic.fr	**Catherine BALOCHE** *Responsable ADV* 02 33 67 80 20 ser.metro@sasic.fr

WWW.SASIC.FR - Hotline technique SASIC - T/ 02.33.67.80.00

Les dépôts à l'étranger / *Warehouses abroad*

C.R.C. RICAMBISTI CAMPANI
CORSO TOMMASO VITALE 98
80035 NOLA NA
ITALIE
Phone : +39 081 510 83 61

Q4Y
UL. PROMYKA 2A, Urzut
05-831 MLOCHOW **POLAND**
Phone : +48 (22) 739 90 94
Fax : +48 (22) 739 90 98

IRQ
POLIGONO INDUSTRIAL
EITUA 10
48240 BERRIZ **ESPAGNE**
Phone : +34 94 62 02 55 99

C.R.S. CONSORZIO RICAMBISTI SICILIANI
VIA DUE FONTANE SNC
93100 CALTANISSETTA **ITALIE**
Phone : +39 095 713 10 51

WE CREATE EXCELLENCE

Production et distribution de pièces automobiles

Production and distribution of Automotive spare parts

SASIC France

☎ 02 33 67 80 20 - Fax 02 33 67 80 29

e-mail : ser.metro@sasic.fr

SASIC International

☎ + 33 1 30 25 78 40 - Fax + 33 1 30 25 78 49

e-mail : ser.exp@sasic.fr

www.sasic.com